OPERATOR'S MANUAL

ROTARY BROOM

SW2160 | SW2172 | SW2184

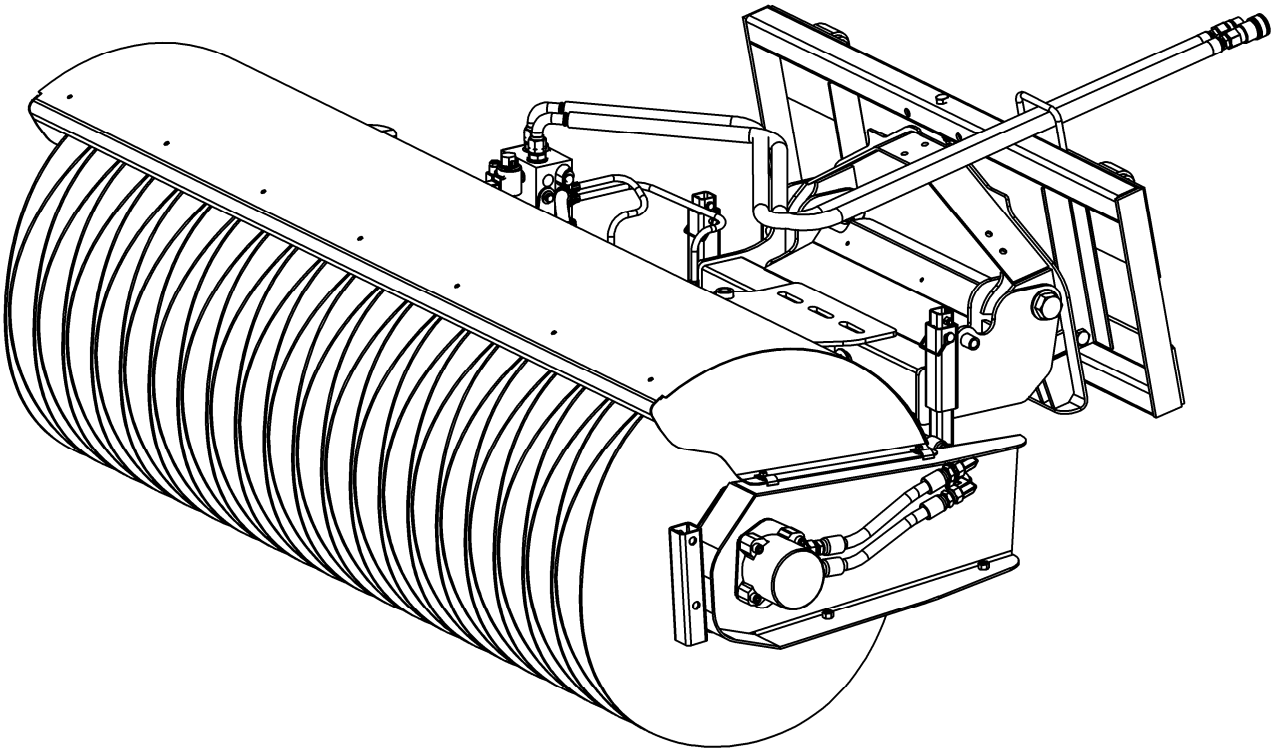

FRONTIER EQUIPMENT™

OM 0402BR-A
01/11

TABLE OF CONTENT

SPECIFICATIONS 3
INTRODUCTION – TO THE PURCHASER 4
SAFETY PRECAUTIONS 5-12
Before Operation 5
Notice 6
The Rotary Broom 6
Before Operation 6
Broom Operation 7
The Tractor 8
General Information 8
Operating the Tractor 8
During Operation 9
Roll-Over Protective Structure (ROPS) (if equipped) 9
Additional Safety Equipment 9
Maintenance 10
Transport 11
Storage 11
DECALS 12
ASSEMBLY 13-33
Broom Assembly 13
Installation of Broom on Front Loader 13
Installation of the Hydraulic Hoses 14
Installation of Electrical Wiring – Tractor With Cab 15-19
Installation of Electrical Wiring – Open StationTractor 20-25
Installation of the Switchbox 5RD669285 - Option 26
Installation of Dust Deflector – 5RDF0030-0031-0032 27
Installation Lawn Dethatching Wheel Support – 5RDF0034 28-29
Installation Lawn Dethatching Wheel kit – 5RDF0033 30
Installation of the Cooling Unit – 5RDF0036 31-32
Removing the Broom from the Front Loader 33

TABLE OF CONTENT

OPERATION....34-37

Optimum Performances 34

General Preparation 34

Operating Controls 34

Hydraulic Angling Adjustment 34

Ground Pressure Adjustment 35-36

General Sweeping 36

Lawn Dethatching & Lawn Raking 37

MAINTENANCE 38-46

Maintenance 38

Hydraulic Oil 38

Storage 38

Brush Replacement 41-40

Compression Springs 40

Lubrication 41

Verification 41

Troubleshooting 42-44

Hydraulic Diagram 45

Electric Diagram 46

TORQUE SPECIFICATION TABLE 47-49

SPECIFICATION

Features and Specifications	SW2160	SW2172	SW2184
Width – in (cm)	72 (183)	84 (213)	96 (244)
Working width, straight – in (cm)	60 (152)	72 (183)	84 (213)
Working width at maximum angle – in (cm)	55 (140)	66 (168)	77 (196)
Working Height – in (cm)	34 (87)	34 (87)	34 (87)
Lenght – in (cm)	69 (175)	69 (175)	69 (175)
Recommanded Flow – GPM	12 to 22	12 to 22	12 to 22
Recommanded Pressure- PSI	2100 to 3600	2100 to 3600	2100 to 3600
Number of wafer	34	39	46
Type of brush	"Z"	"Z"	"Z"
100% polypropyl. Brush	Standard	Standard	Standard
Polypropyl./steel (50/50)	Option	Option	Option
Brush diameter – in (cm)	32 (81)	32 (81)	32 (81)
Brush speed with Hydraulic Pump HP series -rpm	160	160 – HP2025 200 – HP2134	200
Hydraulic Angling	Standard	Standard	Standard
Angling Range	23º-0º-23º	23º-0º-23º	23º-0º-23º
Shear Pin	Standard	Standard	Standard
Loader Compatibility	Current JD 300 Series Loader Carriers	Current JD 300 & 400 Series Loader Carriers	Current JD 400 Series Loader Carriers
Dust Deflector	Option	Option	Option
Lawn Dethatching Wheel kit	Option	Option	Option
Parking Stand	Standard	Standard	Standard
Approx. shipping weight - lbs (kg)	1177 (314)	1197 (338)	1237 (363)
Brush Cover Thickness – ga (in)	14 – 0.0747	14 – 0.0747	14 – 0.0747
Side Panel Thickness – in (mm)	3/16 (5)	3/16 (5)	3/16 (5)
Broom drive	Hydraulic Motor 375 cc/rev.	Hydraulic Motor 375 cc/rev.	Hydraulic Motor 375 cc/rev.
Relief Valve Protection	Standard	Standard	Standard
Main hydraulic Hoses – in (mm)	3/4 (76)	3/4 (76)	3/4 (76)
Cooling Unit	Option	Option	Option
Dust Suppression system	Option	Option	Option
Rear Spraying Support	Standard	Standard	Standard
Hydraulic Power Pack compatibility	HP2025	HP2025 or HP2134	HP2134

Assembly time: 2-3 hours (including the hydraulic pump).

INTRODUCTION

IMPORTANT NOTICE

Frontier loader mounted hydraulic rotary brooms are calibrated and tested at the plant in order to ensure the best possible performance. The calibration of these rotary brooms requires the proper equipment and a certain expertise.

Any partial modification or adjustment made on the rotary broom without the written consent of the manufacturer will automatically void the rotary broom warranty.

The adjustments of the hydraulic components must never be modified. A breaking in period is necessary before the rotary broom is operated at full capacity. See the "Operation" section for more details.

TO THE PURCHASER

All products are designed to give safe, dependable service if they are operated and maintained according to instructions. **Read and understand this manual before operation.**

This manual has been prepared to assist the owner and operators in the safe operation and suitable maintenance of the implements. The information was applicable to products at the time of manufacture and does not include modifications made afterwards.

Read and understand this operator's manual before attempting to put an implement into service. Familiarize yourself with the operating instructions and all the safety recommendations contained in this manual and those labeled on the implements and on the tractor. Follow the safety recommendations and make sure that those with whom you work follow them.

Illustrations

The illustrations may not necessarily reproduce the full detail and the exact shape of the parts or depict the actual models, but are intended for reference only

Direction Reference

Right Hand and Left Hand are determined by those seen by the operator sitting on the tractor.

¡LEA EL INSTRUCTIVO!

Si no lee Ingles, pida ayuda a alguien que si lo lea para que le traduzca las medidas de seguridad.

The Dealer is responsible for warranty registration of the unit you have purchased. To assist your dealer in handling your needs, please record hereafter the model number and serial number of your implement and tractor. It is also advisable to supply them to your insurance company. It will be helpful in the event that an implement or tractor is lost or stolen.

MODEL : _____

SERIAL NUMBER : _____

DATE OF PURCHASE : _____

SAFETY PRECAUTIONS

SAFETY FIRST

This symbol, the industry's "Safety Alert Symbol", is used throughout this manual and on labels on the machine itself to warn of the possibility of personal injury. Read these instructions carefully. It is essential that you read the instructions and safety regulations before you attempt to assemble or use this unit.

DANGER : Indicates an immediate hazardous situation which, if not avoided, will result in death or serious injury.

WARNING : Indicates a potentially hazardous situation which, if not avoided, could result in death or serious injury.

CAUTION : Indicates a potentially hazardous situation which, if not avoided, may result in minor or moderate injury.

IMPORTANT : Indicates that equipment or property damage could result if instructions are not followed.

NOTE : Gives helpful information.

All products are designed to give safe, dependable service if they are operated and maintained according to instructions. **Read and understand this manual before operation**. It is the owner's responsibility to be certain anyone operating this product reads this manual, and all other applicable manuals, to become familiar with this equipment and all safety precautions. Failure to do so could result in serious personal injury or equipment damage. If you have any questions, consult your dealer.

BEFORE OPERATION

Children

Tragic accidents can occur if the operator is not alert to the presence of children. Children are generally attracted to machines and the work being done. Never assume children will remain where you last saw them.

1. Keep children out of the operating area and under the watchful eye of another responsible adult.
2. Be alert and turn machine off if children enter the work area.
3. Before and when backing, look behind for children.
4. Never carry children while operating the machine. They may fall off and be seriously injured or interfere with the safe operation of the machine.
5. Never allow children to play on the machine or attachment even when they are turned off.
6. Never allow children to operate the machine even under adult supervision.
7. Use extra care when approaching blind corners, shrubs, trees, or other obstructions that might hide children from sight.

NOTICE

A safe operator is the best assurance against accidents. All operators, no matter how experienced they may be, should read this operator's manual and all other related manuals before attempting to operate the equipment. Please read the following section and pay particular attention to all safety recommendations contained in this manual and those labeled on the equipment and on the tractor.

THE ROTARY BROOM

Before Operation

1. Read and understand this operator's manual and the tractor operator's manual. Know how to operate all controls and how to stop the unit and disengage the controls quickly.

2. Never wear loose, torn, or bulky clothing around the tractor and the rotary broom. It may catch on moving parts or controls, causing injury.

3. Before and during the snow season, thoroughly inspect the area where the equipment is to be used and remove all objects that may be thrown or cause damage to the equipment.

4. Set transmission to neutral and disengage clutch, if equipped, before starting the engine.

5. Do not operate equipment in wintertime without wearing adequate winter garments and protective clothing.

6. Never attempt to make any adjustments while engine is running. Read this manual carefully to acquaint yourself with the equipment as well as the tractor operator's manual. Working with unfamiliar equipment can lead to accidents. Be thoroughly familiar with the controls and proper use of the equipment.

7. Keep all safety guards in place and verify hardware for proper tightening.

8. Check for moving parts excessive wear regularly. Replace worn parts with genuine parts.

9. Replace all missing, illegible, or damaged safety and warning decals. See list of decals in operator's manual.

10. Keep safety decals clean of dirt and grime.

11. Do not modify or alter this equipment or any of its components or any equipment function without first consulting your dealer.

12. The use of rear counterweights is recommended. Weights provide the necessary balance to improve stability, traction and steering. Use only those recommended by your dealer. Please refer to tractor's operator's manual for proper ballasting information.

Rotary Broom Operation

1. Before leaving the tractor unattended, take all possible precautions. Park the tractor/rotary broom on level ground, place the transmission in neutral, set the parking brake, disengage the PTO, lower the rotary broom to the ground, place all levers including auxiliary control levers in neutral, shut off the engine and remove the ignition key.
2. Before starting the tractor/ rotary broom, inspect and clean every rotating part.
3. Prior to operation, clear work area of all objects that can be picked up and thrown. Mark all curbs, pipes, etc. that cannot be moved.
4. Be sure the PTO switch/lever is in OFF position before starting engine.
5. Exercise extreme caution when operating on or crossing a gravel drive, walks, or roads. Stay alert for hidden hazards or traffic.
6. Do not carry passengers.
7. Keep clear of all rotating parts. Do not put hands or feet under, or into rotary broom with engine running. Be especially observant of the rotary broom areas of discharge, intake or all other mechanical motions.
8. Park the tractor/rotary broom on level ground, place the transmission in neutral, set the parking brake, disengage the PTO, lower the rotary broom to the ground, place all control levers in neutral, shut off the engine, remove the ignition key and allow the rotating parts to stop BEFORE making any repairs, adjustments or inspections.
9. If the rotary broom starts to vibrate abnormally, disengage the PTO, stop the engine immediately and check for cause. Excessive vibration is generally a sign of a problem.
10. Do not run the engine indoors except when starting engine and transporting attachment in or out of building. Carbon monoxide gas is colorless, odorless and deadly.
11. Do not attempt to operate on steep slopes. If operating on slopes is necessary, exercise extreme caution when changing direction.
12. Never operate rotary broom without guards, and other safety protective devices in place. All tractor and rotary broom shields and covers must be correctly installed at all times. When necessary to remove these, they must be reinstalled immediately.
13. Never operate rotary broom near glass enclosures, automobiles, window wells, embankments, etc., without proper adjustment of discharge angle.
14. Never operate rotary broom at high transport speeds on a slippery surface.
15. Use extra caution when backing up.
16. Disengage power to rotary broom when transporting or when not in use.
17. Never operate the rotary broom without good visibility and lighting.
18. Prolonged exposure to loud noise can cause impairment or loss of hearing. Wear a suitable hearing protective device such as earmuffs or earplugs to protect against objectionable or uncomfortable noises.
19. Never allow anyone near the work area.
20. Always make sure all rotary broom components are properly installed and securely fastened BEFORE operation.
21. Make sure nobody is in the working area of the rotary broom. The debris that can be thrown could cause serious personal injuries.
22. Adjust spring tension so that the rotary broom head weighs approximately 50 lbs when the front is lifted.
23. Be careful when the loader/equipment is in raised position; the broom is assembled on pivot and may bump. This is normal, but dangerous. Keep the broom as much as possible near to the ground.

THE TRACTOR

General Information

1. Read the operator's manual carefully before using tractor. Lack of operating knowledge can lead to accidents.
2. Do not permit anyone but the operator to ride on the tractor. There is no safe place for passengers.

Operating the Tractor

1. Never run the tractor engine in a closed building without adequate ventilation, as the exhaust fumes are hazardous.
2. Adopt safe driving: If the tractor is equipped with independent Right/Left brake pedals, keep the brake pedals latched together at all times unless independent braking is required. Never use independent braking during transport.
3. Always drive at a safe speed relative to local conditions and ensure that your speed is low enough for an emergency stop to be safe and secure.
4. Reduce speed prior to turns to avoid the risk of overturning. Keep speed to a minimum.
5. Always keep the tractor in gear to provide engine braking when going downhill. Do not coast.
6. Never allow an open flame near the fuel tank or battery.
7. Make sure the PTO shield is installed when using the rotary broom and always replace the PTO shield if damaged.
8. Park the tractor/rotary broom on level ground, place the transmission in neutral, set the parking brake, disengage the PTO, lower the rotary broom to the ground, place all levers including auxiliary control levers in neutral, shut off the engine and remove the ignition key BEFORE leaving the tractor.
9. Never park the tractor on a steep slope.
10. Do not attempt to operate on steep slopes. Avoid sudden uphill turns on steep slopes.
11. Handle fuel with care, as it is highly flammable.
12. Use approved fuel container.
13. Never add fuel to a running engine or a hot engine.
14. Fill fuel tank outdoors with extreme care. Never fill fuel tank indoors. Replace fuel cap securely and wipe up spilled fuel.
15. Never attempt to start the engine and/or engage rotary broom drive while standing beside the tractor.
16. Always start the engine from the operator's seat with all the transmission lever(s) and rotary broom drive lever in neutral.
17. DO NOT bypass the safety system by shorting across the terminals of the starter motor to start the engine. This may cause the tractor to move suddenly.
18. If the safety start system does not work, consult your dealer immediately.

During Operation

1. Do not allow passengers on the tractor/rotary broom at any time. There is no safe place for passengers on this rotary broom. The operator MUST sit in the tractor seat.
2. Eye and hearing protection is recommended when operating the rotary broom.
3. Operate only during daylight hours, or when the area is well lit with bright artificial light.
4. Park the tractor/rotary broom on level ground, place the transmission in neutral, set the parking brake, disengage the PTO, lower the rotary broom to the ground, place all control levers in neutral, shut off the engine and remove the ignition key BEFORE leaving the operator's seat.
5. Inspect the rotary broom after striking any foreign object to assure that all rotary broom parts are secure and not damaged.
6. Be especially observant of the operating area and terrain. Watch for holes, rocks, or other hidden hazards. ALWAYS inspect the area prior to operating rotary broom.
7. DO NOT operate rotary broom near the edge of drop-offs or banks.
8. DO NOT operate rotary broom on steep slopes as overturn may result.
9. Operate up and down (not across) intermediate slopes. Avoid sudden starts and stops.
10. Drive tractor backwards up steeper slopes with rotary broom off. Then operate as you travel down the slope.
11. Slow down before you change directions on any slope.
12. Make sure the tractor is counterweighted as recommended by your dealer. Weights provide the necessary balance to improve stability, traction and steering.
13. Never stand alongside of the rotary broom while the engine is running.

Roll-Over Protective Structure "ROPS"
(If Equipped)

1. DO NOT weld, drill or alter the ROPS. Damaged ROPS must not be straightened or used. If damage does occur, consult your dealer.
2. If the ROPS is lowered or removed from the tractor for any reason, it must be erected and/or refitted immediately. Original bolts or equivalent replacements must be used and tightened to the correct torque.**.** The manufacturer does not recommend usage of tractor with ROPS removed.
4. If a fold-down ROPS is used, the ROPS can be folded down for storage, but it must be pinned in the upright position prior to operation.
5. Seat belt usage: With ROPS installed on the tractor it is imperative that the seat belt be installed, used and correctly adjusted, at all times. DO NOT use a seat belt if operating without ROPS.

Additional Safety Equipment

A fire extinguisher and first aid kit should be kept readily accessible.

MAINTENANCE

ALWAYS USE GENUINE PARTS WHEN REPLACEMENT PARTS ARE REQUIRED

1. Keep the tractor and rotary broom properly maintained.
2. Park the tractor/rotary broom on level ground, place the transmission in neutral, set the parking brake, disengage the PTO, lower the rotary broom to the ground, place all control levers in neutral, shut off the engine and remove the ignition key and allow the rotating parts to stop BEFORE making any rotary broom adjustments.
3. To avoid injury, do not adjust, unblock the driving system, or service the rotary broom with the tractor engine running. Make sure rotating components have completely stopped before leaving the operator's seat.
4. Keep the tractor/rotary broom clean. Snow , dirt or ice build-up can lead to malfunction or personal injury from thawing and refreezing in garage.
5. Always wear eye protection when cleaning or servicing the rotary broom.
6. DO NOT service the tractor while the engine is running or hot, or if the unit is in motion. Always lower rotary broom to the ground. If necessary to service rotary broom in raised position, securely support with stands or suitable blocking before working underneath. Do not rely on hydraulically supported devices for your safety. They can settle suddenly, leak down, or be accidentally lowered.
7. Do not attempt to service machine, clear obstructions or unclog the rotary broom's driving system with the engine running. Always shut off engine and allow all motion to cease.
8. The manufacturer will not accept responsibility for fitment of unapproved parts and/or accessories and any damages as a result of their use.
9. Make sure all shields and guards are securely in place following all service, cleaning, or repair work.
10. Do not modify or alter this rotary broom or any of its components or operating functions. If you have questions concerning modifications, consult with your dealer.
11. Do not operate a rotary broom that is defective or has missing parts. Make sure that all recommended maintenance procedures are completed before operating the rotary broom.
12. Check all controls regularly and adjust where necessary. Make sure that the brakes are evenly adjusted.
13. Periodically check all nuts and bolts for tightness, especially wheel hub and rim nuts.
14. To avoid serious personal injury: Escaping hydraulic/diesel fluid under pressure can penetrate the skin causing serious injury. Do not use your hands to check for leaks. Use a piece of cardboard or paper to search for leaks.
15. Stop engine and relieve pressure before connecting or disconnecting hydraulic hoses. Tighten all connections before starting engine or pressurizing hoses.

TRANSPORTING

1. Transporting on public roadway: When driving the tractor and rotary broom on the road or highway under 25 mph, at night or during the day, use flashing amber warning lights and the Slow Moving Vehicle ("SMV") identification emblem.
2. Check local traffic codes that may apply to unit usage on public roads and highways in your area. The use of flashing amber lights is acceptable in most localities. However, some localities may prohibit their use.
3. Always disengage rotary broom drive prior to transporting unit.

STORAGE

Before storing the rotary broom, certain precautions should be taken to protect it from deterioration.

1. Clean the rotary broom thoroughly.
2. Make all the necessary repairs.
3. Replace all safety signs that are damaged, lost, or otherwise become illegible. If a part to be replaced has a sign on it, obtain a new safety sign from your dealer and install it in the same place as on the removed part.
4. Repaint all parts from which paint has worn or peeled.
5. Lubricate the rotary broom as instructed under **"Lubrication"** section.
6. When the rotary broom is dry, oil all moving parts. Apply oil liberally to all surfaces to protect against rust.
7. Store in a dry place.

DECALS

Replace immediately if damaged

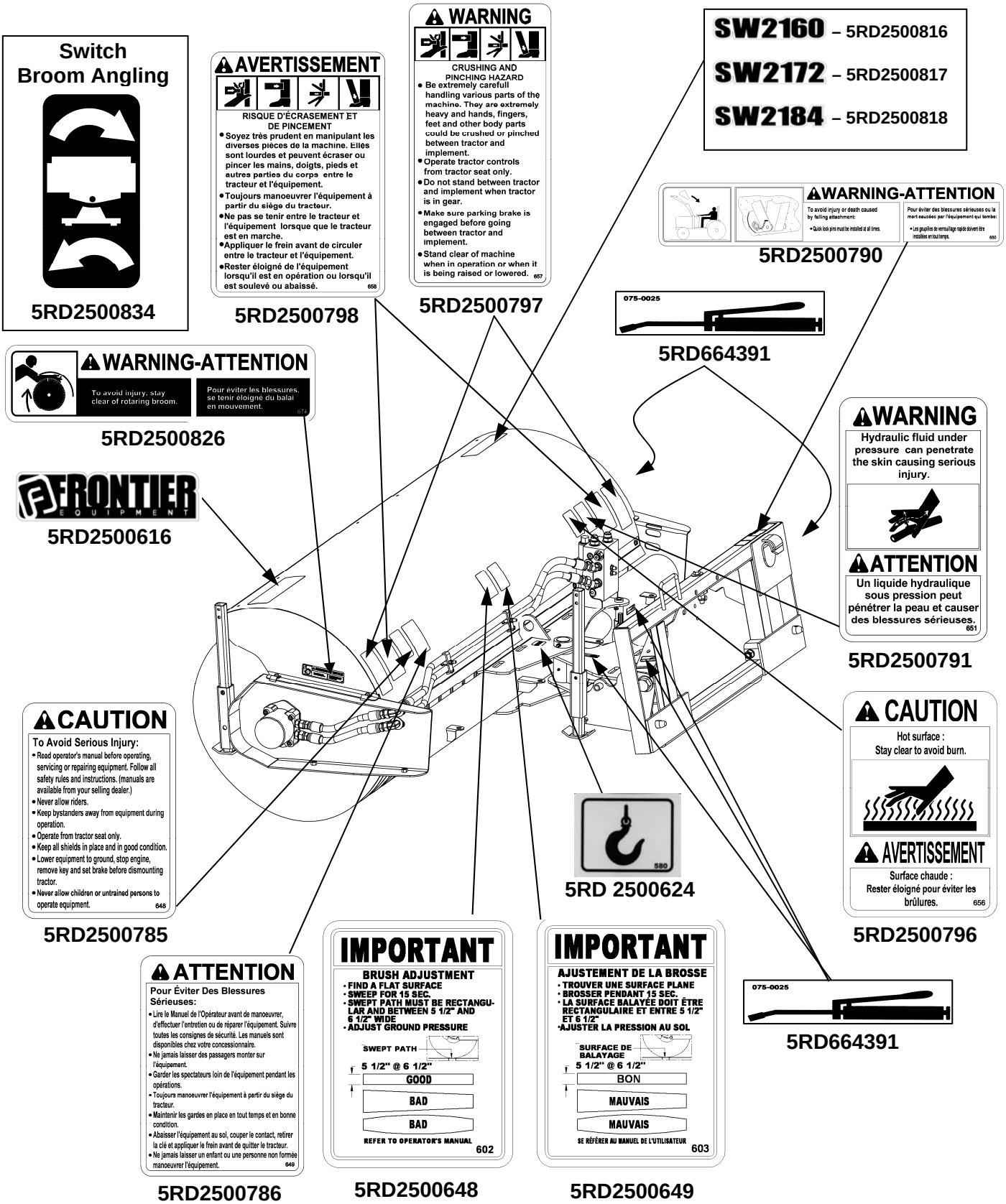

ROTARY BROOM ASSEMBLY

The rotary broom is pre assembled at the factory, however, parts contained in the options must be installed. Use the present manual and lay out all parts for assembly. Separate bolts and nuts into various sizes. After assembly, torque all the bolts according to the Torque Specification Table enclosed at the end of the manual.

Installation of Broom on Front Loader (Figure 1)

1. Remove the linchpins (item 3) from the front loader brackets (item 2).
2. Start engine and rotate the front loader brackets (item 2) at an approximate 45° angle.
3. Bring forward the vehicle until the top of two hooks of the universal hitch are attached to the two front loader brackets (item 2). The broom must be slightly off the ground.
4. Rotate the front loader brackets (item 2) toward the rear until the broom is completely off the ground.

NOTE: Pay attention to any unusual problem or noise. If that's the case, stop and check that everything is in place and start again.

5. Stop completely the vehicle and set the parking brake. Get down the vehicle.
6. Fix the front loader brackets with the two provided linchpins (item 3).
7. Raise completely the four parking stands (item 5) of the rotary broom (item 1).

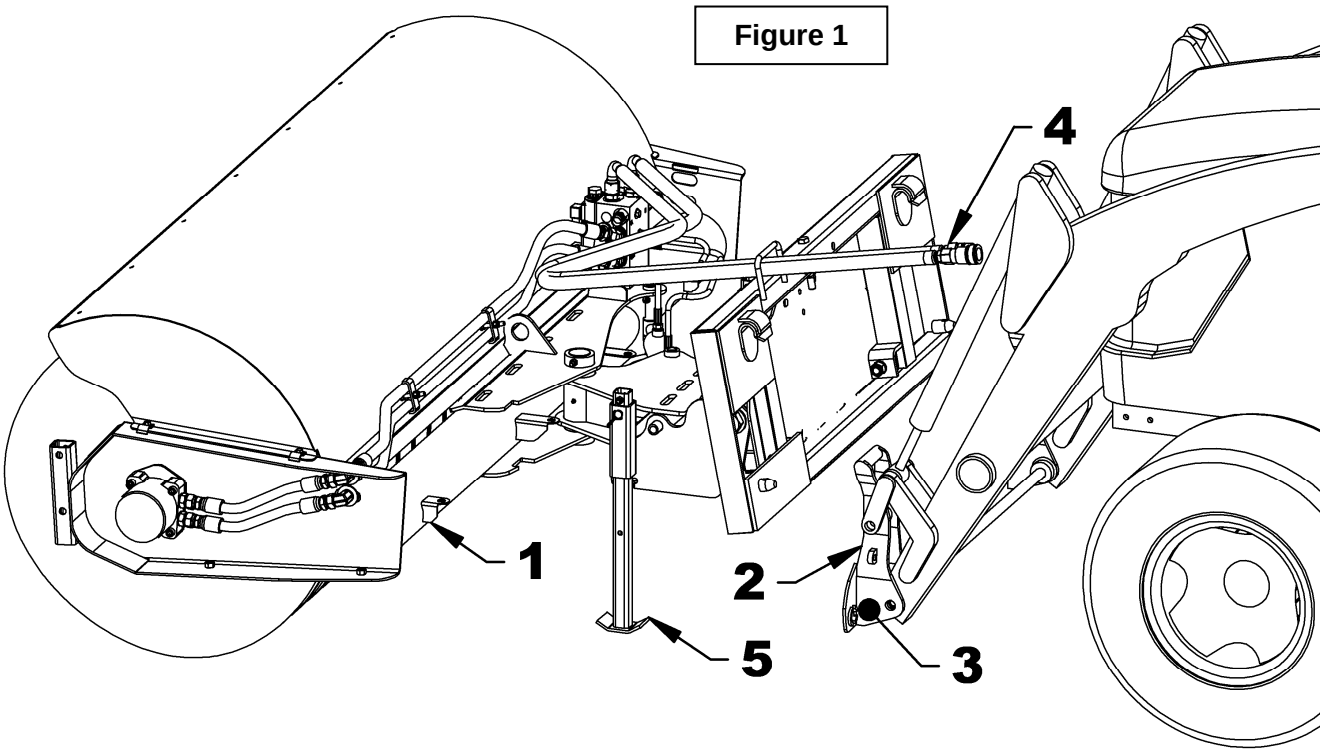

Figure 1

Installation of the Hydraulic Hoses
(Figures 2-3)

1. **Figure 2:** Insert the hydraulic hoses and the electric harness (items 1, 2 and 5) through the hose support of the universal hitch (item 3) then through the front support of the loader (item 4). Make sure the hose protector (not shown) is under the bar of the universal hitch hose support (item 3). Place the other hose protector (not shown) along the elements in contact with the hoses.
2. **Figure 3:** Connect the male coupler of the rotary broom hose (item 1) to female coupler of the hydraulic pump hose (item 2). Connect the female coupler of the rotary broom hose (item 3) to male coupler of the hydraulic pump hose (item 4).

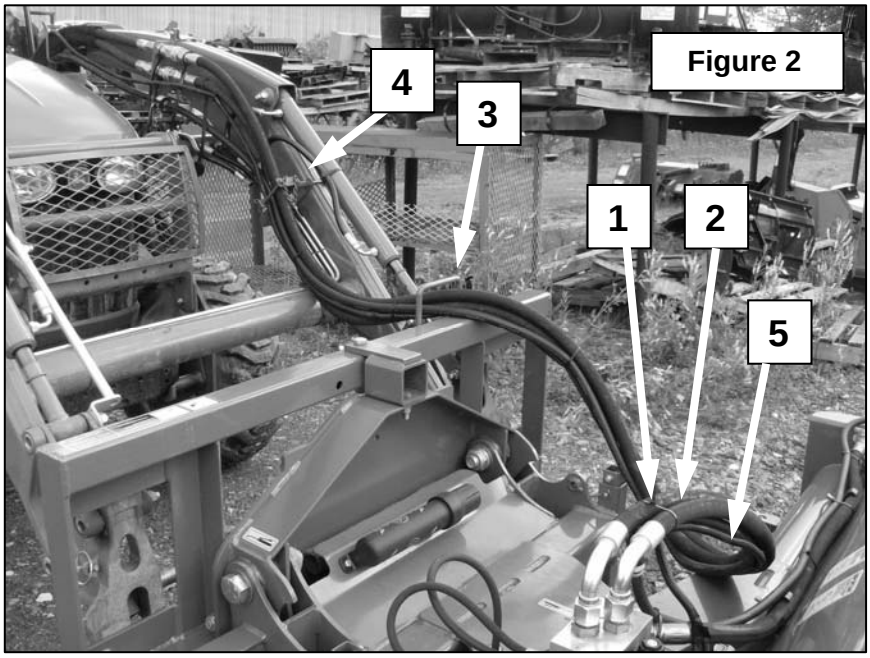

Figure 2

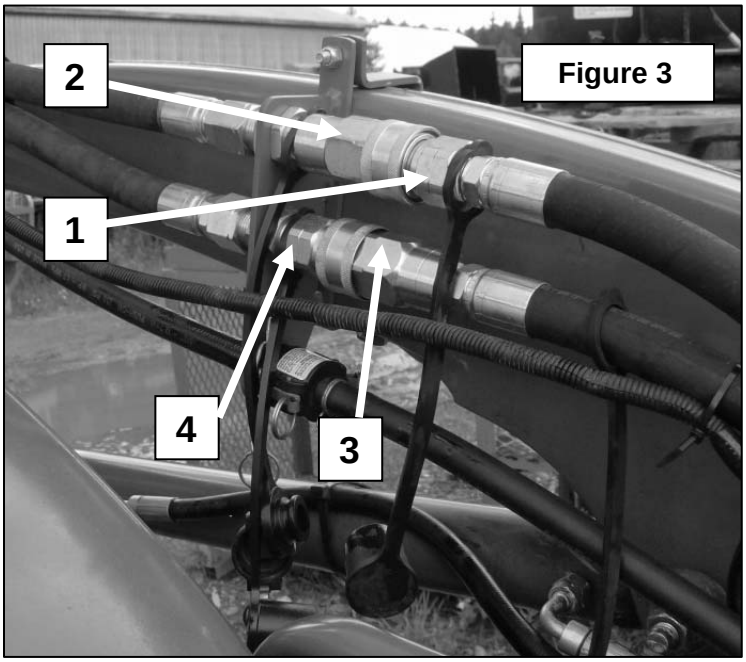

Figure 3

Installation of the Electrical Wiring – TRACTOR WITH CABIN

(Figures 4 to 14)

NOTE: Tractor side wiring harness refers to the 132" lg. harness (part #5RD4000077 of 5RDF0039 kit) in this section. The 58" harness (5RDF0038 kit) is not used when the tractor has a cabin.

1. **Figure 4:** Run the 170" rotary broom wiring harness (item 2) along the same course as the hydraulic hoses previously installed (item 1) and insert the harness (item 2) in the rear support of the front loader (item 3).
2. **Figure 5:** Run the rotary broom wiring harness down the loader arm (item 1) and bring the male connector of the harness (item 2) to the position illustrated. Connect the female connector of the tractor wiring harness (item 3) to the male connector (item 2) of the rotary broom harness.

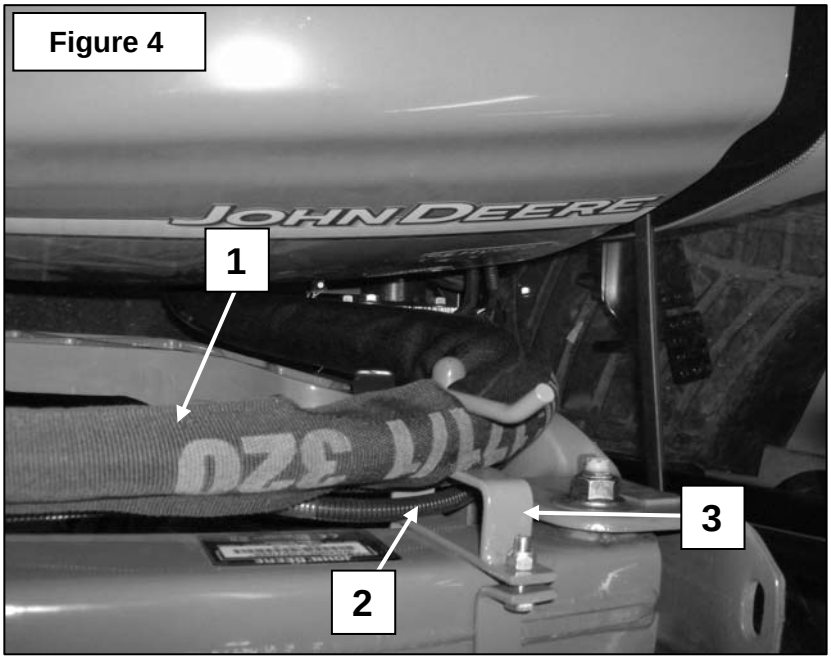

Figure 4

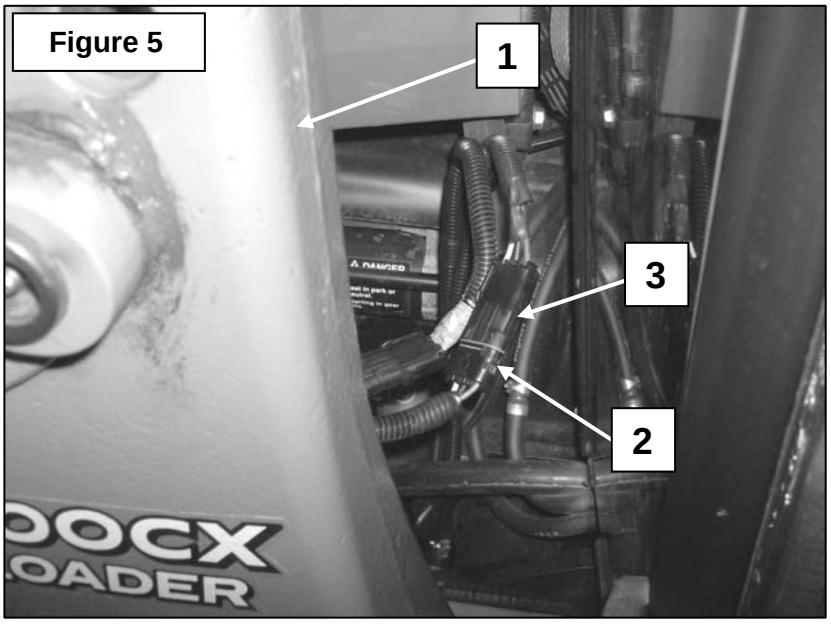

Figure 5

3. **Figure 6:** Run the tractor wiring harness (item 1) alongside the tractor hydraulic hoses (item 2) and attach with a tie wrap (item 3).

   NOTE: If a 21 series hydraulic snowblower has ever been installed on the tractor, it may be possible that this harness is already installed. If so, go to next step.

4. **Figure 7:** Run the tractor wiring harness (item 1) behind the support plate of the loader (item 2) and secure where shown with a tie wrap (item 3).

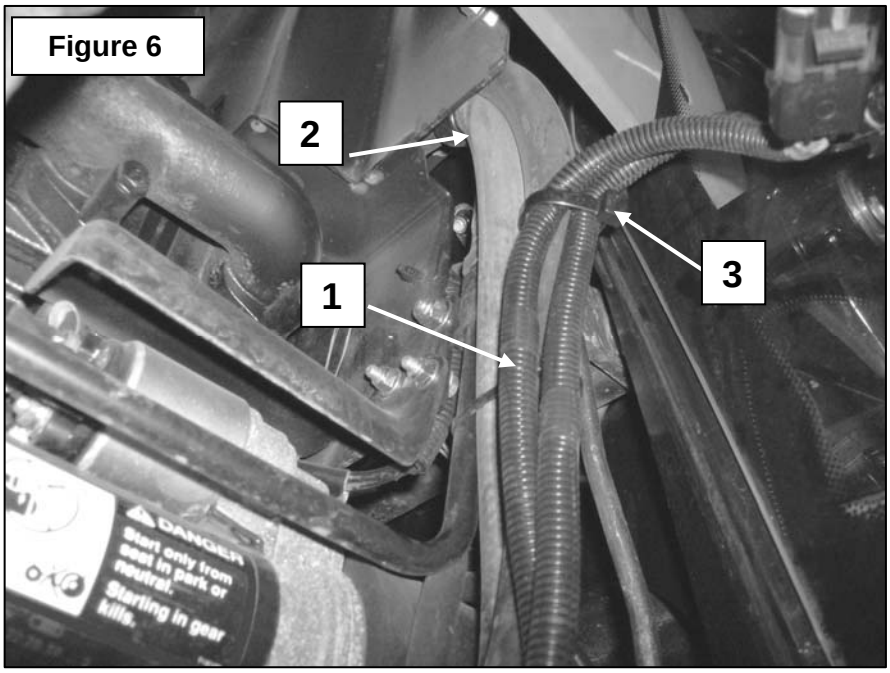

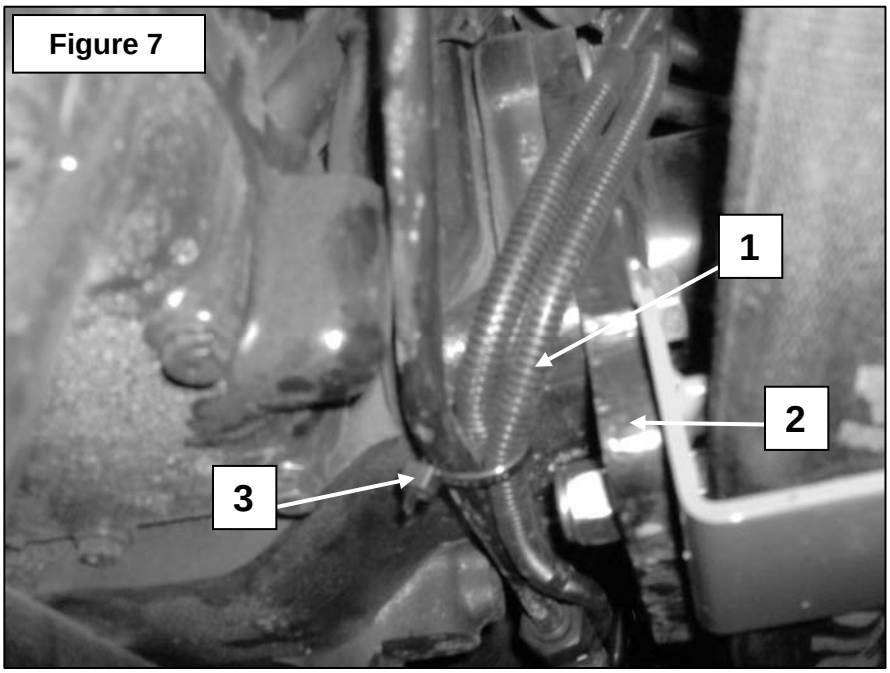

5. **Figure 8:** Run the tractor wiring harness (item 1) under the tractor where illustrated and secure to safe places (item 2) away from tractor moving parts, with a tie wrap (item 3). Bring the harness to the back of the tractor

6. **Figure 9:** Bring the tractor wiring harness (item 1) over the transmission housing (item 2) and towards the right fender of the tractor. Attach the harness (item 1) to the cable (item 3) with a tie wrap (not illustrated).

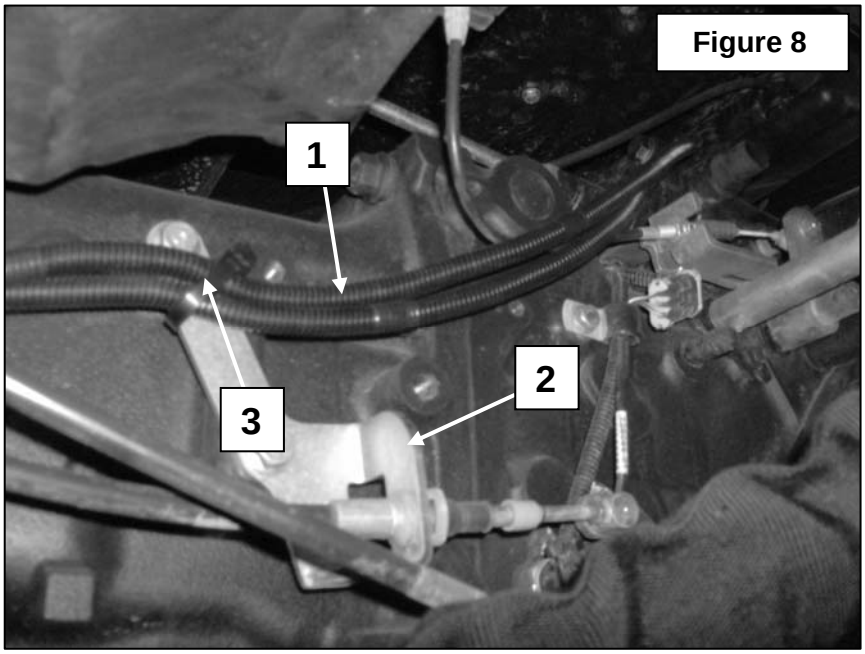

Figure 8

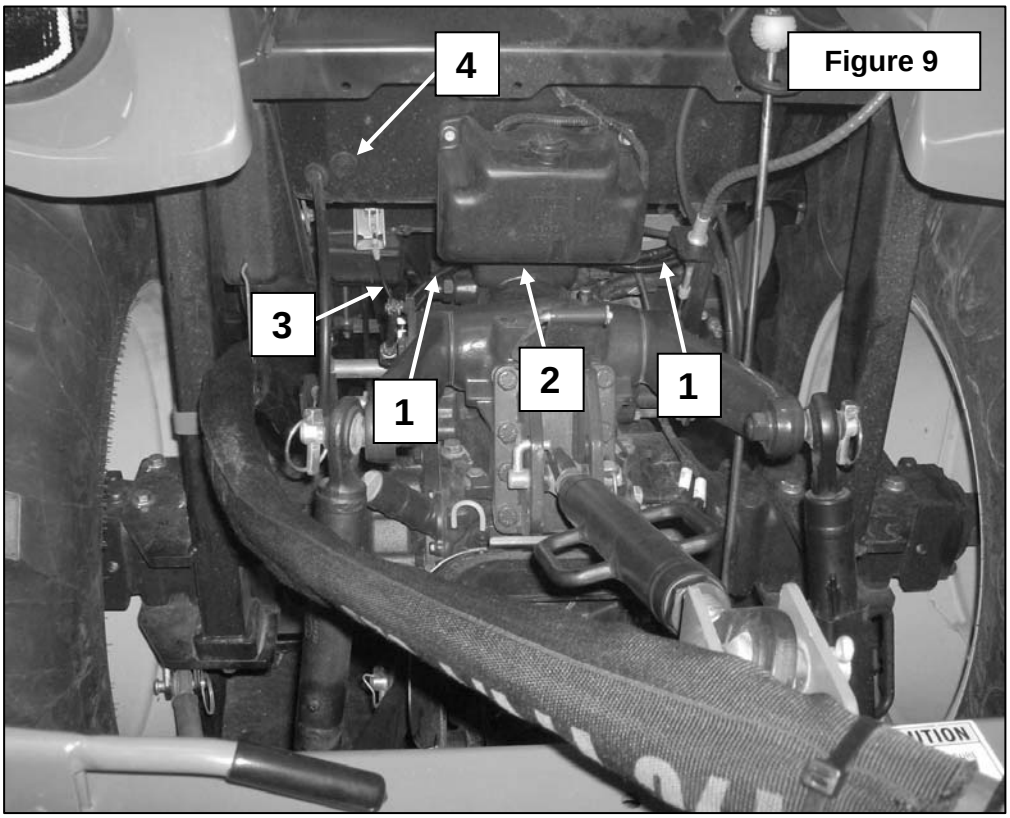

Figure 9

7. **Figure 10:** Bring the wiring harness (item 1) through the hole located besides the seat in the rear right side corner of the cabin. If it is not possible to bring those wirings through this hole, use the hole item 4 on figure 9.

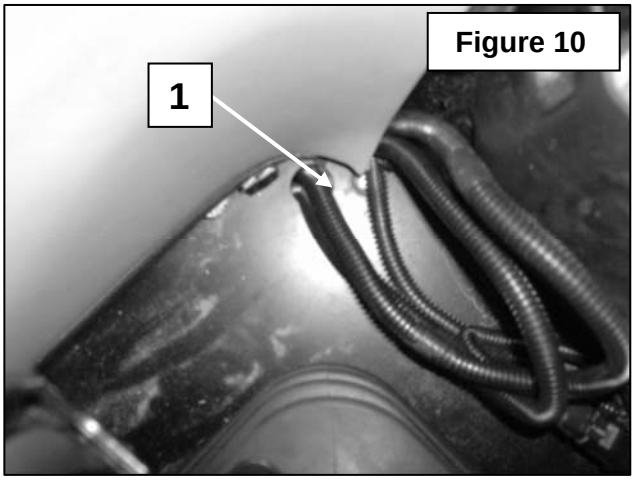

Figure 10

8. **Figure 11:** Install the switch (item 1) in one of the available holes of the console. If there are no available holes, an optional switchbox is available (see page 27).

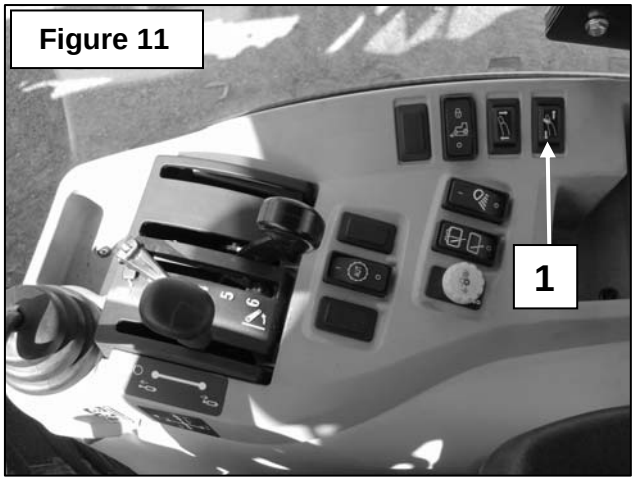

Figure 11

9. **Figure 12a-12b:** Partially remove the plastic cover and the flexible panel on the side of the seat by unscrewing the three bolts (item 1) and the molding clip (item 2). Run the harness behind the flexible panel and bring it to the console switches.

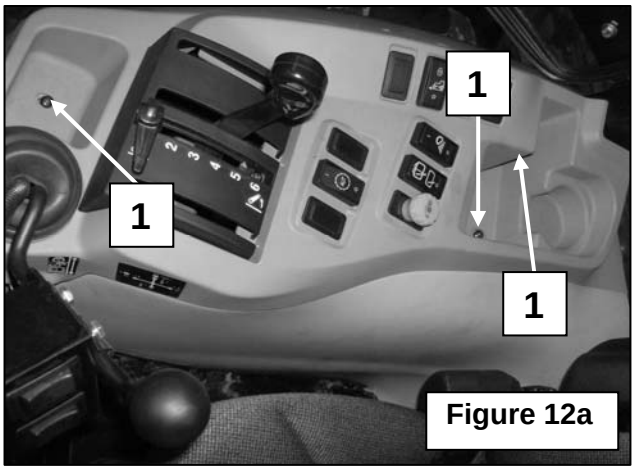

Figure 12a

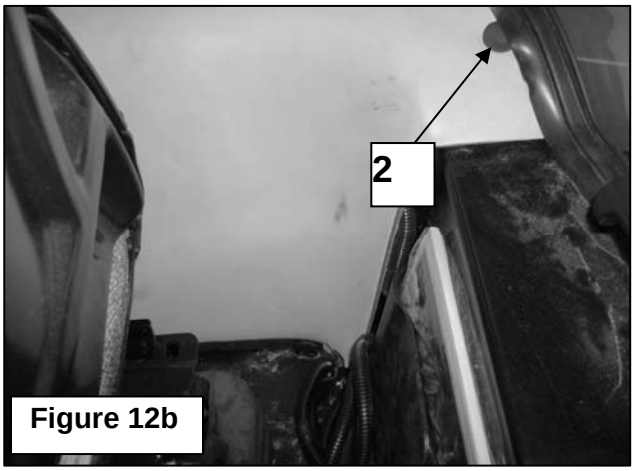

Figure 12b

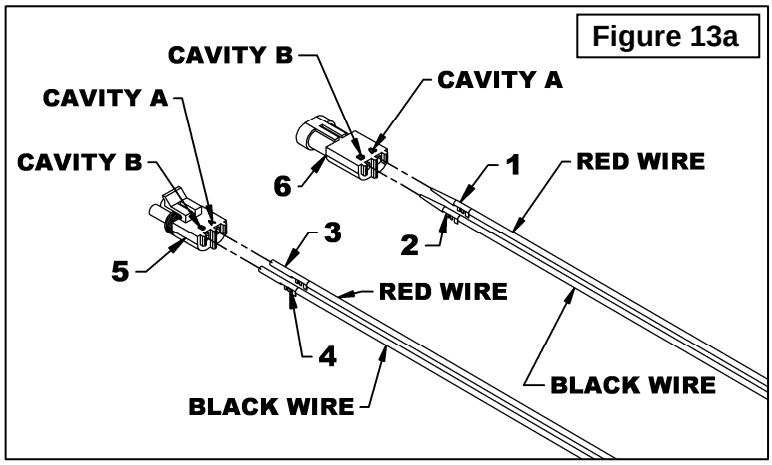

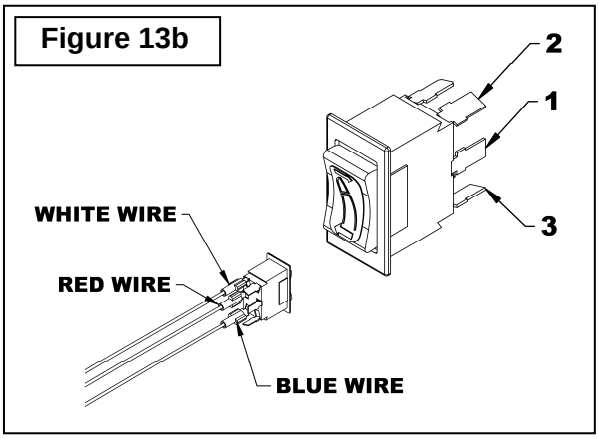

10. **Figure 13a:** Insert the male terminals (items 1-2) in the female connector (item 6). Insert the female terminals (items 3-4) in the two male connectors (item 5).

    <u>IMPORTANT</u>: Connect the red wires in the A cavities and the black wires in the B cavities.

11. **Figure 14:** Connect the male connector (item 1) to the available female connector of the tractor wiring harness (item 2).

    If some tractor equipment is already using that female connector (item 2), remove the existing male connector, place the equipment's male connector (item 1) in that female connector (item 2) and then attach the male connector initially removed to the second female connector (item 3) of the equipment wiring harness.

12. **Figure 13b:** Connect the red wire to blade 1, the white wire to blade 2 and the blue wire to blade 3 of the switch. The red wire **must** be connected on the center blade (item 1).

    <u>NOTE</u>: If the rotary broom does not rotate as illustrated on the switch, reverse the white and blue wires.

13. **Figures 12a-12b:** Place the extra wiring harness inside the console and reinstall the console and the cover removed previously.

14. Stick the decal provided with the manual on the switch.

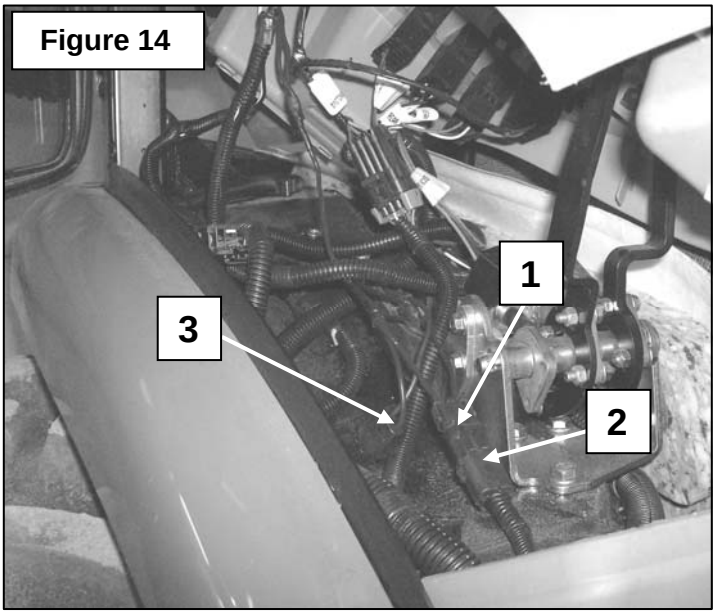

Installation of the Electrical Wiring – OPEN STATION TRACTOR *(Figures 15 to 32)*

NOTE: If a 21 series hydraulic snowblower has ever been installed on the tractor, it may be possible that this harness is already installed.

1. **Figure 15:** Connect the red wire terminal of the 58" wiring harness (item 1) (with fuse holder) to the positive terminal of the battery and the black wire terminal (item 3) to the negative terminal of the battery (item 4). Connect the terminal on the orange wire (item 5) to the hydraulic pump harness flat terminal installed on the tractor. Attach the harness to the tractor wiring near the relay with a tie wrap (not illustrated).

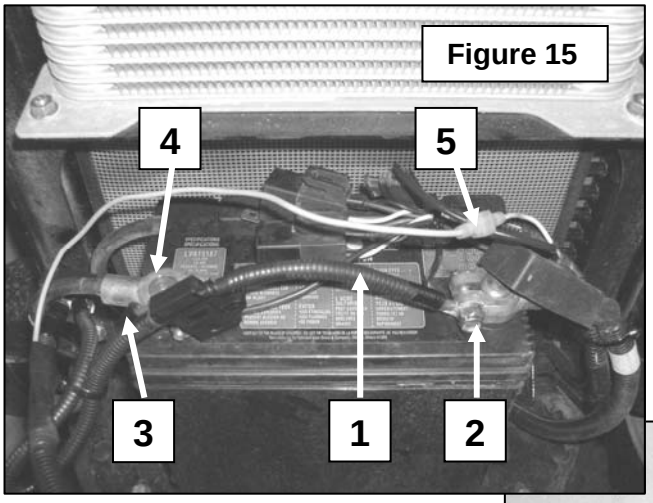

Figure 15

2. **Figure 16:** Insert the wiring harness (item 1) in the rubber boot (item 2). On certain tractor models, it may be necessary to remove the hose tie (fig.17, item 3) to run the harness. Reinstall the tie once the harness is installed.

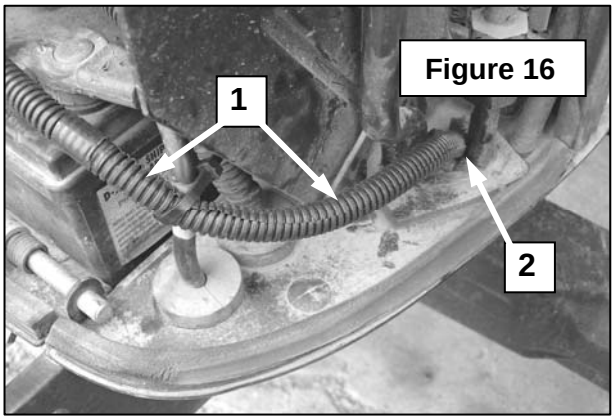

Figure 16

3. **Figure 17:** Run the wiring harness (item 1) along the front of the tractor frame and attach to the tractor wiring and/or hose (item 4) with tie wraps (item 2-3).

4. **Figures 18:** Run the 2 cavity connector near the starter.

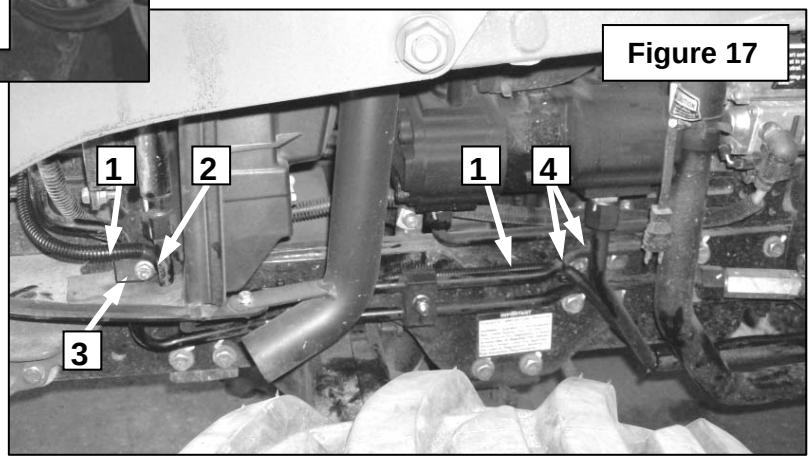

Figure 17

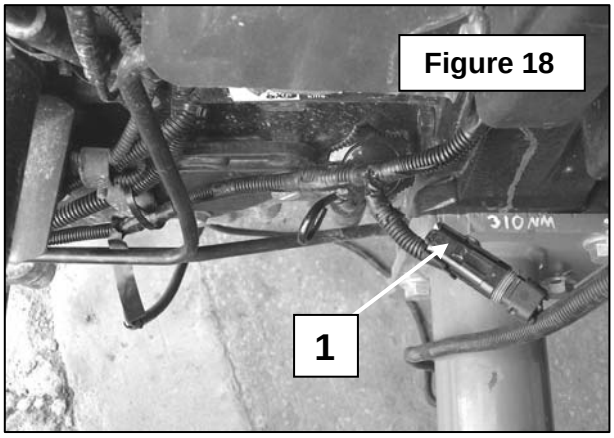

Figure 18

5. **Figure 19:** Connect the 132" harness (item 1) to the 58" harness (item 2). If the 132" harness is not installed, install it and then connect it.
6. Attach the harness in the appropriate areas to make sure all removable parts (ex. oil plug, dip stick) can be removed).

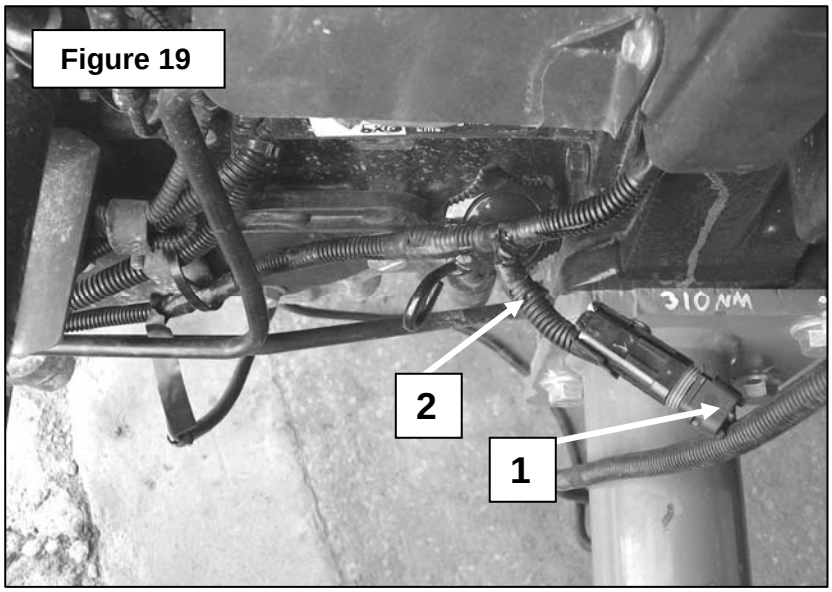

Figure 19

7. **Figure 20:** Run the rotary broom wiring harness along the same course as the hydraulic hoses previously installed (item 1) and insert the harness (item 2) in the rear support of the front loader (item 3).

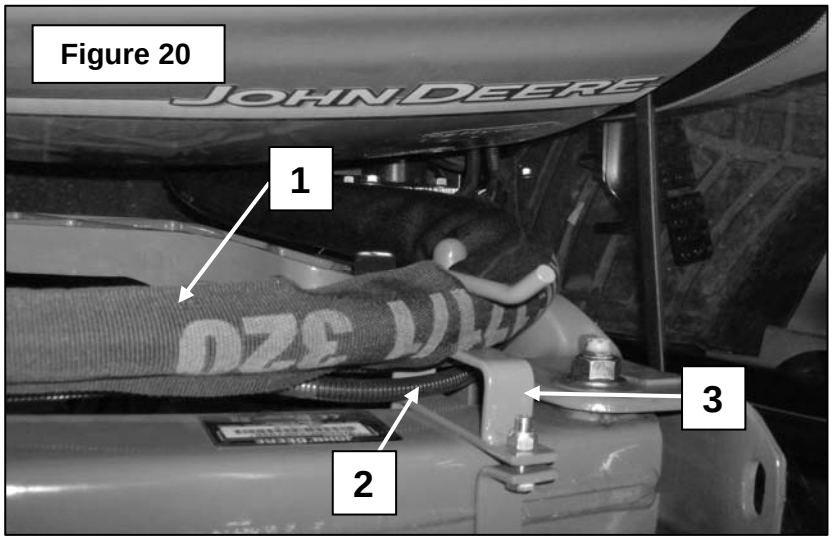

Figure 20

8. **Figure 21:** Run the rotary broom wiring harness down the loader arm (item 1) and bring the male connector of the harness (item 2) to the position illustrated. Connect the female 3 cavity connector of the 132" tractor side wiring harness (item 3) to the male 3 cavity connector (item 2) of the rotary broom harness.

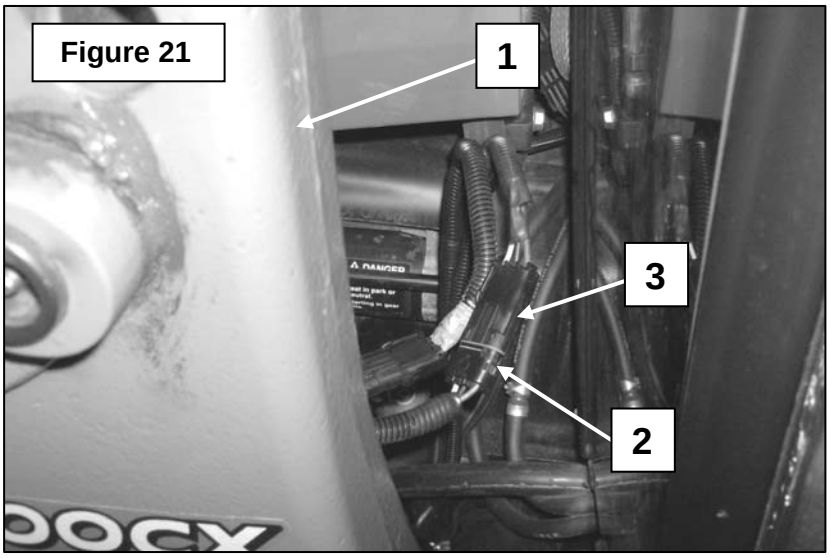

Figure 21

9. **Figure 22:** Run the 132" wiring harness tractor side (item 1) alongside the tractor hydraulic hoses (item 2) and attach with a tie wrap (item 3).

   NOTE: If a 21 series hydraulic snowblower has ever been installed on the tractor, it may be possible that this harness is already installed. If so, go to next step.

10. **Figure 23:** Run the harness tractor side (item 1) behind the support plate of the loader (item 2) and secure where shown with a tie wrap (item 3).

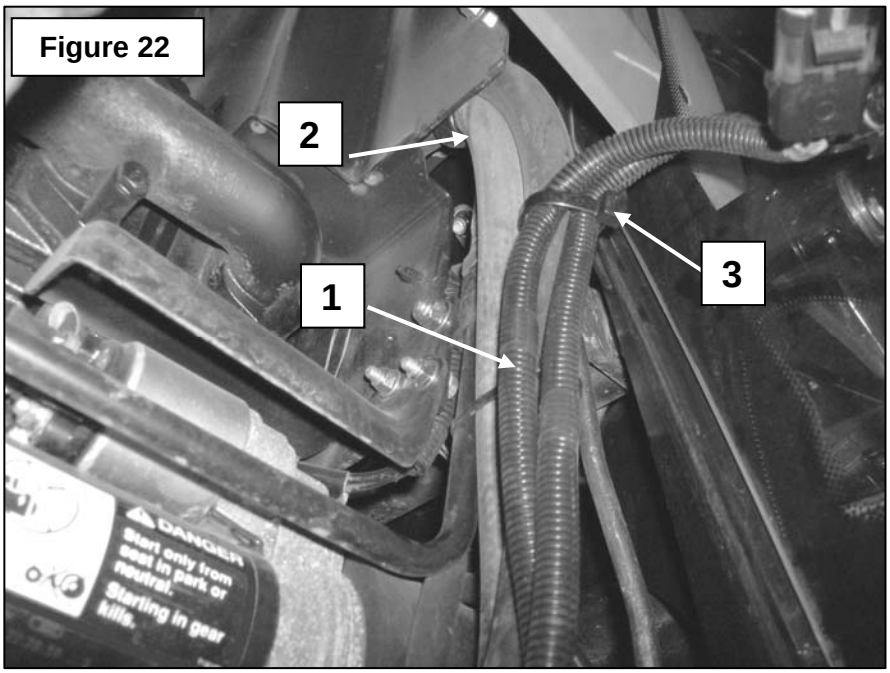

Figure 22

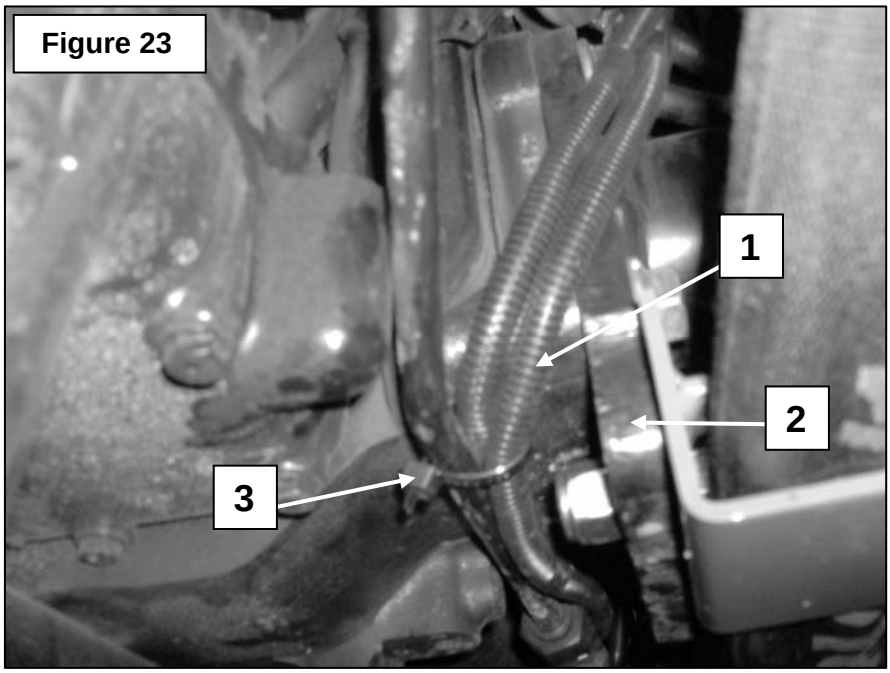

Figure 23

11. **Figure 24:** Run the harness tractor side (item 1) under the tractor where illustrated and secure to safe places (item 2), away from tractor moving parts, with a tie wrap (item 3). Bring the harness to the back of the tractor.

12. **Figure 25:** Bring the 132" harness (item 1) over the transmission housing (item 2) and towards the right fender of the tractor. Attach the harness (item 1) to the cable (item 3) with a tie wrap (not illustrated).

13. **Figure 26:** If the optional switchbox is used, bring the harness close to the front loader control lever (item 1).

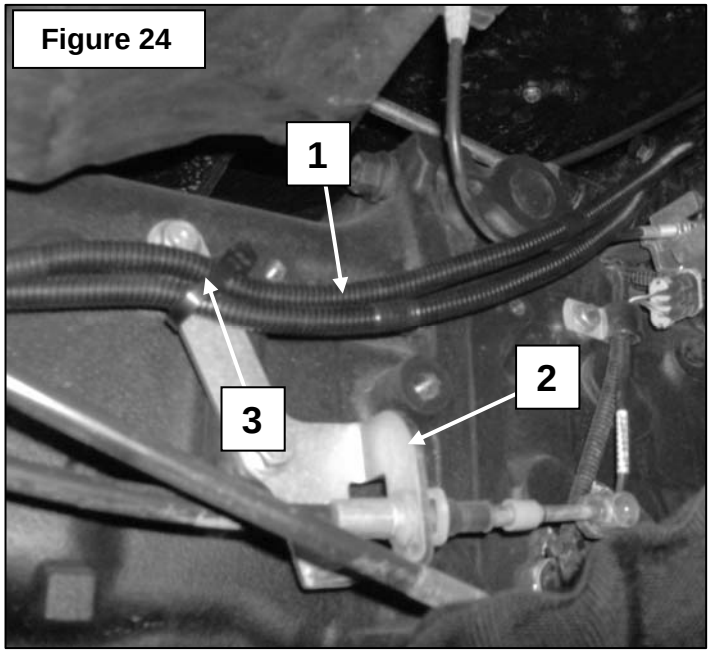

Figure 24

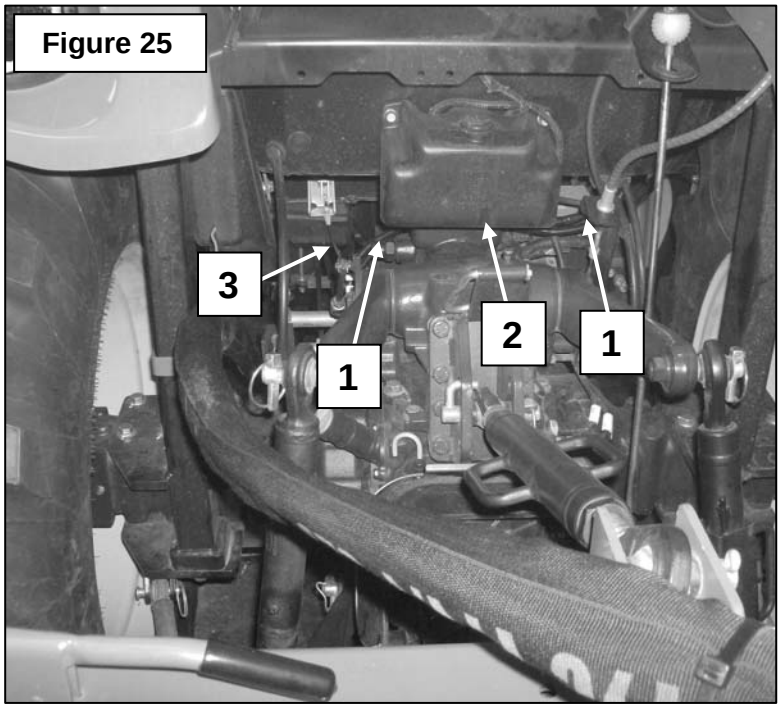

Figure 25

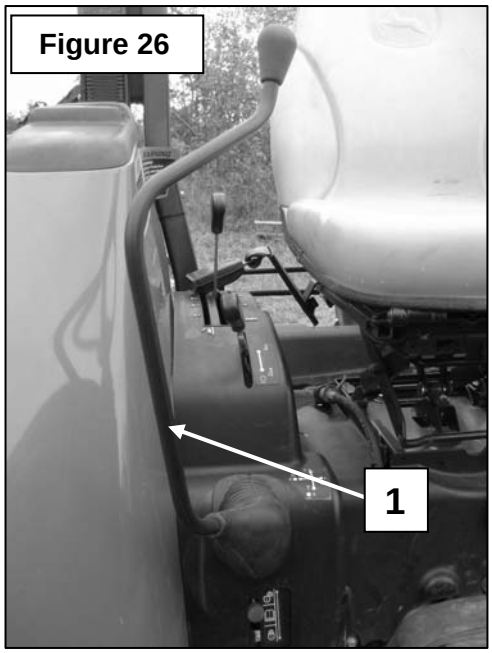

Figure 26

14. Figure 27: Unscrew the two bolts (items 1-2) under the rear right fender.

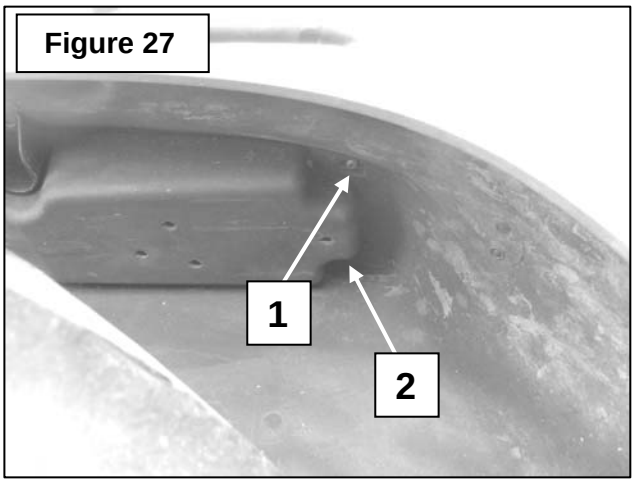

Figure 27

15. Figure 28a-28b: Remove the cover located under the rear right fender by removing the three bolts (items 1-2-3) and the screw (item 4) for the 3000 series tractors.

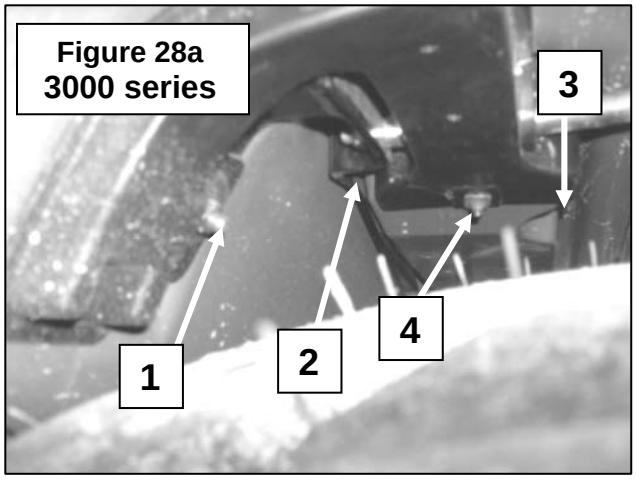

Figure 28a
3000 series

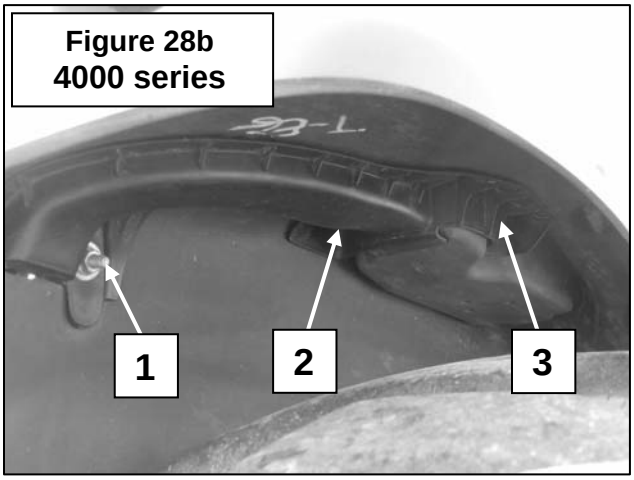

Figure 28b
4000 series

16. Figures 29a-29b: Insert the 132" harness (item 1) through the hole of the right fender (item 2) then through the guard of the console (item 3). Attach the harness where shown on the figure.

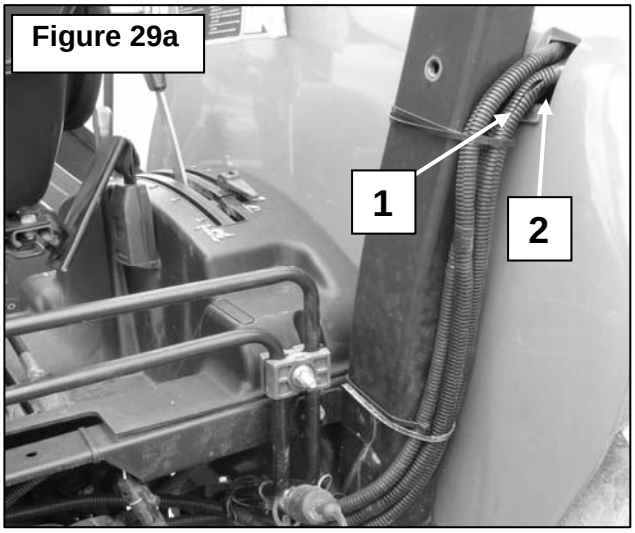

Figure 29a

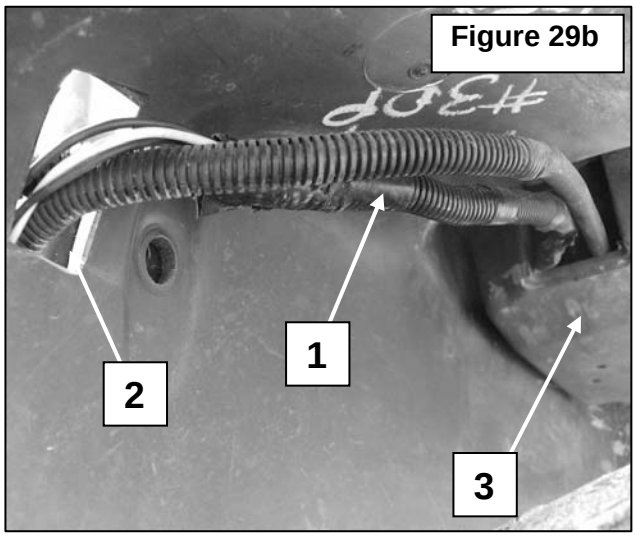

Figure 29b

17. **Figure 30:** Install the switch in one of the available holes of the console (item 1). If there are no available holes, an optional switchbox is available (see page 27).
18. **Figure 31:** Insert the male terminals of the 132" harness (items 1-2) in the female connector (item 6) and insert the female terminals (items 3-4) in the 2 cavity male connector (item 5).

IMPORTANT: Connect the red wires in the A cavities and the black wires in the B cavities.

19. **Figure 32:** If this is the installation of a first 132" harness, connect the 2 cavity connector to the 58" harness located near the loader left arm. If it is for a second 132" harness installation, connect the 2 cavity male connector of the second harness to the 2 cavity female connector of the first harness in the tractor right console.
20. **Figure 32a:** Connect the red wire to blade 1, the white wire to blade 2 and the blue wire to blade 3 of the switch. The red wire **must** be connected on the center blade (item 1).

NOTE: If the broom does not rotate as illustrated on the switch, reverse the white and blue wires.

21. **Figures 27-28a-28b:** Place the remaining harness inside the console and reinstall the console and the cover removed previously.
22. Stick the decal provided with the manual on the switch.

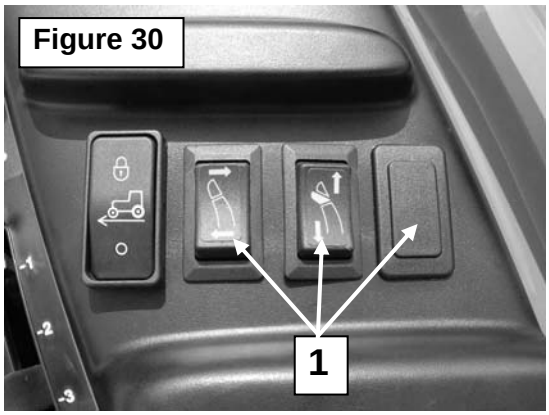

Figure 30

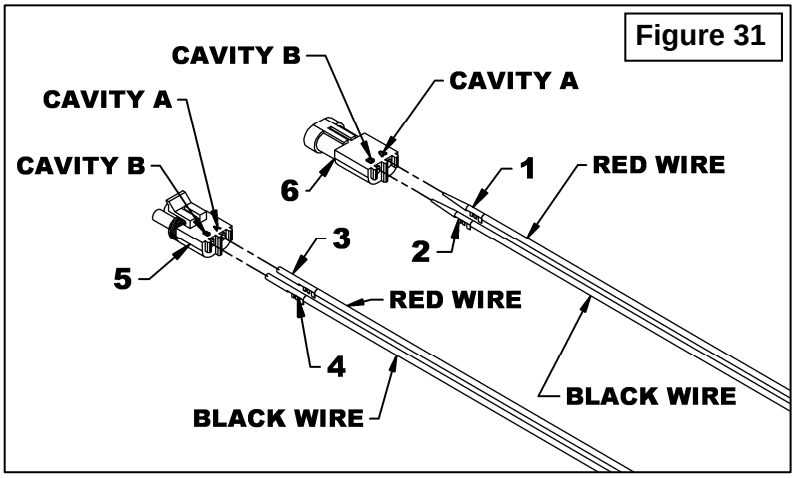

Figure 31

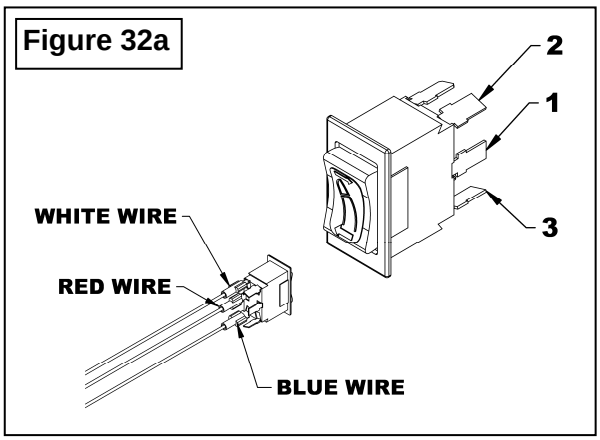

Figure 32a

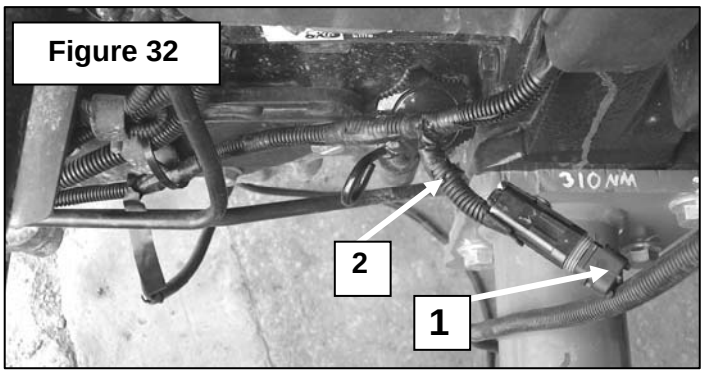

Figure 32

Installation of the Switchbox Kit 5RD669285 – Option
(Figures 33-34)

NOTE: Figure 33 represents a tractor with a cabin but the same installation procedure applies to a tractor without a cabin.

1. **Figure 33:** Install the switch (item 1) in one of the holes of the switchbox (item 2). Place the switchbox against the control stick of the front loader (item 3) and secure in place with the two clamps (item 4) and the four 1/4"NC X 3/4" lg.hex. bolts (item 5).
2. **Figure 33:** Insert the wire harness (item 6) through the rubber boot (item 7).

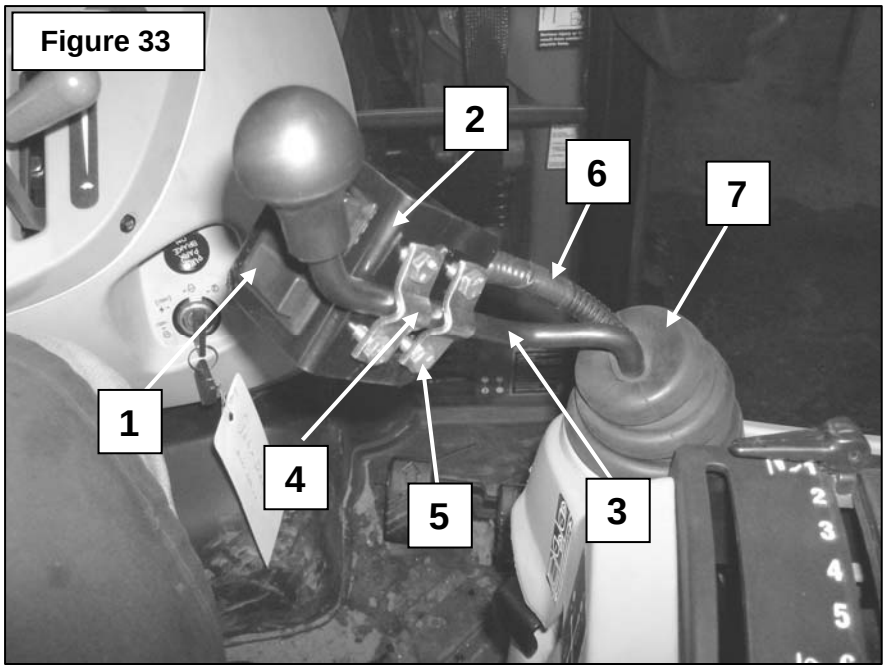

Figure 33

3. **Figure 34:** Connect the red wire to blade 1, the white wire to blade 2 and the blue wire to blade 3 of the switch. The red wire **must** be connected on the center blade (item 1).

   NOTE: If the broom does not rotate as illustrated on the switch, reverse the white and blue wires.

4. Stick the decal provided with the manual on the switch.

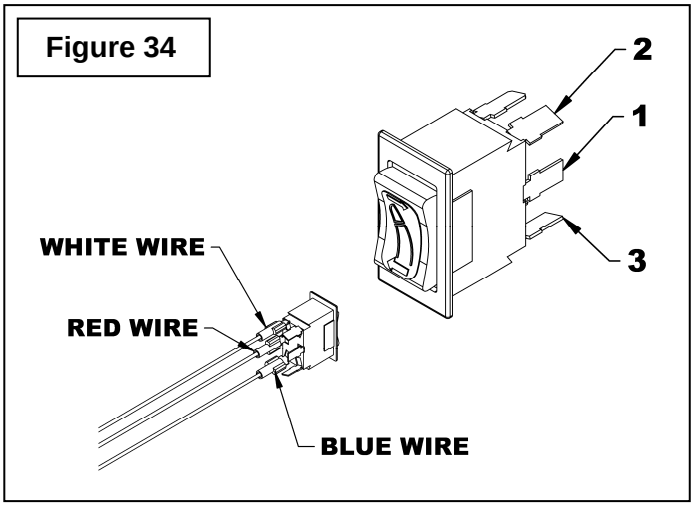

Figure 34

Installation of Dust Deflector– 5RDF0030-0031-0032

(Figures 35a-35b-35c)

WITHOUT FRONT SUPPORT

1. **Figure 35a:** Install the dust deflector brace (item 1) on the brush cover (item 6) with 5/16"NC x 1" hex bolts, flat washers and nylon insert locknuts (items 3-4-5).
2. Install the dust deflector (item 2) on the outside dust deflector brace (item 1) with 5/16"NC x 1" hex bolts, flat washers and nylon insert locknuts (items 3-4-5).

WITH FRONT SUPPORT ***(Fig.35b-35c)***

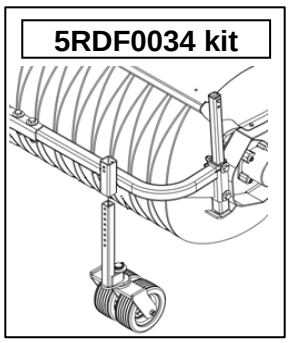

If your broom is equipped with front support for lawn dethatching wheel, use the die cut template provided with the Instruction Sheet, to make notches in the dust deflector for the support tubes. See figure 35c.

1. Install the dust deflector brace (item 1) on the brush cover (item 6) with 5/16"NC x 1" hex bolts, flat washers and nylon insert locknuts (items 3-4-5). Do not tighten.
2. Install the dust deflector (item 2) on the dust deflector brace (item 1) with 5/16"NC x 1" hex bolts, flat washers and nylon insert locknuts (items 3-4-5). Do not tighten.
3. Then from the inside of the broom, secure to the wheel front support (item 7) with the hardware provided with the lawn dethatching wheel support: eight 5/16"NC x 1 1/2" hex bolts, eight lockwashers and eight flat washers (items 8-9-4) in the nuts already riveted in the tubes.
4. Tighten all bolts.

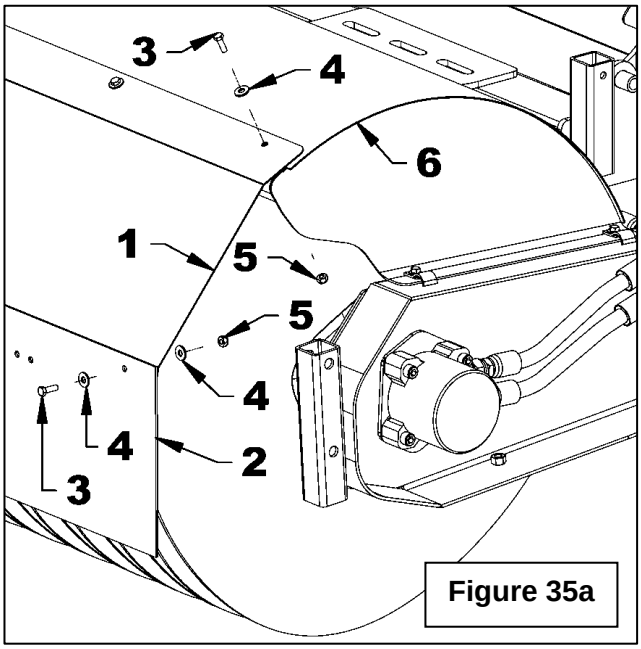

Figure 35a

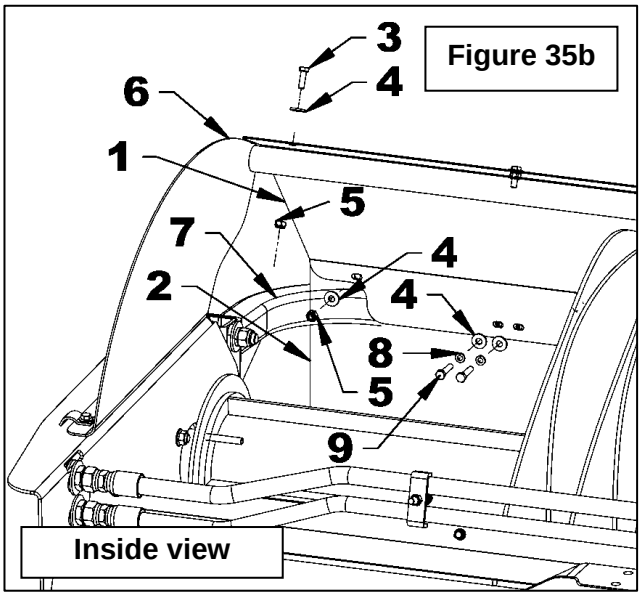

Figure 35b

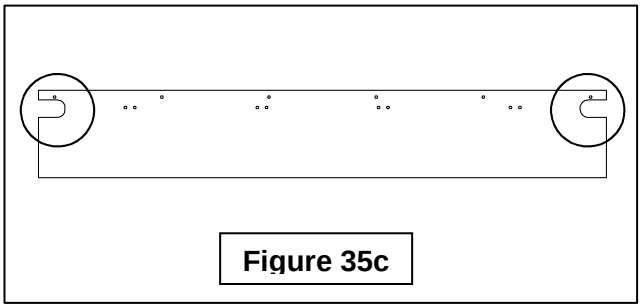

Figure 35c

Installation of Lawn Dethatching Wheel Front Support – 5RDF0034

(Figures 36a-36e)

NOTE: This Kit includes eight bolts, flat washers & nuts for a Dust Deflector installation (not included) when there is no Dust Suppression Kit.

1. **Figure 36a:** Install the broom on the vehicle and raise it. Take off the two parking stands (item 4) by removing the bolts (item 1), the nuts (item 2) and the square wire lock pins (item 3).

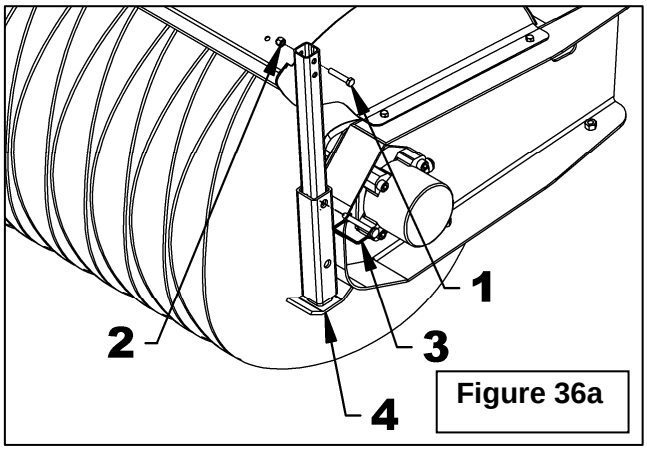

Figure 36a

NOTE: If the parking stand tubes don't have two holes (item 2) go to step 4 first.

2. **Figure 36b –84" broom:** Install the left and right wheel supports (items1-7) on the parking stand tubes (item 2) with two bolts (item 3), four flat washers (item 4), two lockwashers (item 5) and two nylon insert nuts (item 6). Insert the reinforcement tube (item 8), placing holes with knurled clinch nut toward the brushes, in the tube support (item 9) and secure with four bolts (item 3), eight flat washers (item 4), four lockwashers (item 5) and four nylon insert nuts (item 6). Attach the support tube (item 9) to the left and right wheel supports (items 1-7) with four bolts (item 3), eight flat washers (item 4), four lockwashers (item 5) and four nylon insert nuts (item 6).

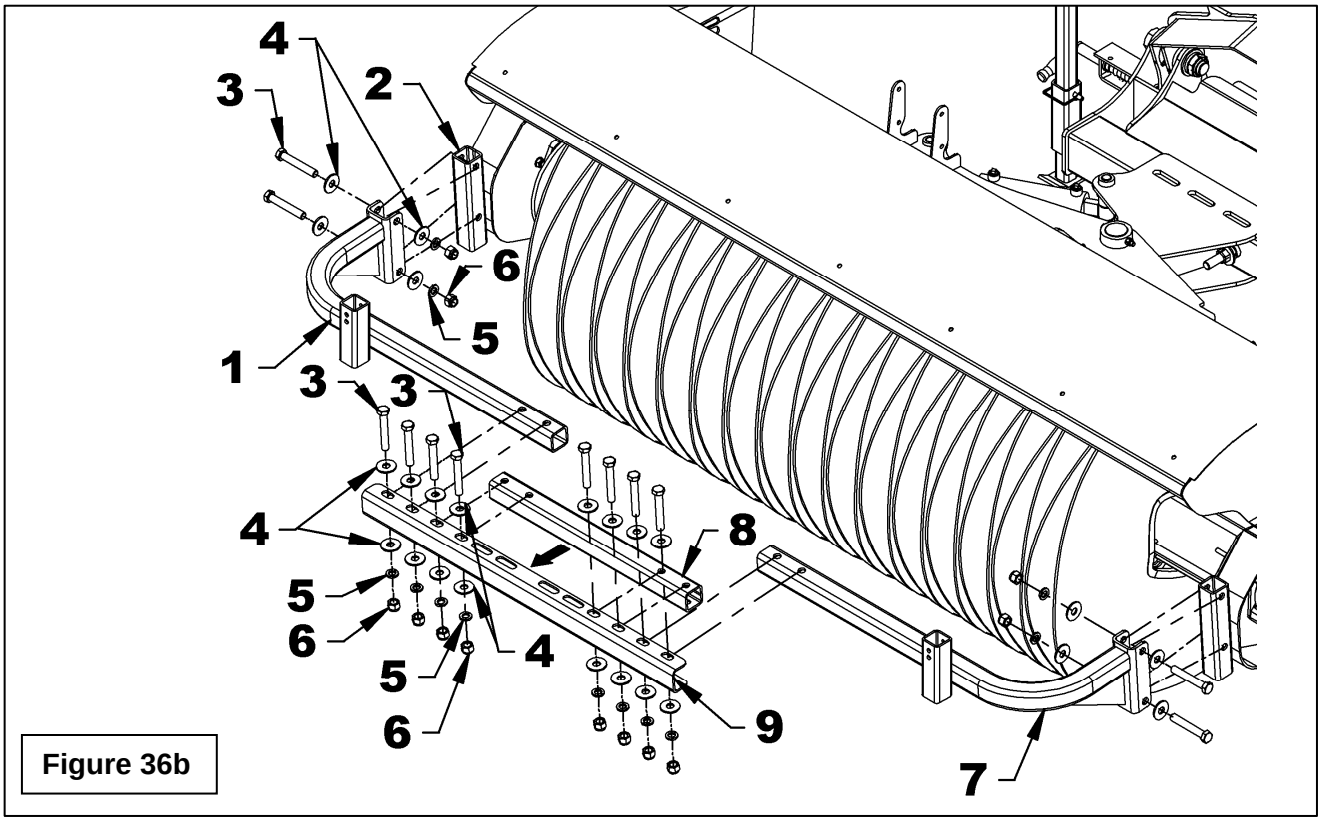

Figure 36b

NOTE: If the parking stand tubes don't have two holes (item 2) go to step 4 first.

3. **Figure 36d – 60" and 72" brooms:** Install the left and right wheel supports (items 1-7) on the parking stand tubes (item 2) with two bolts (item 3), four flat washers (item 4), two lockwashers (item 5) and two nylon insert nuts (item 6). Attach the support tube (item 8) to the right and left wheel supports (items 1-7) in the appropriate holes depending on the width of the broom (see figure) with four bolts (item 3), eight flat washers (item 4), four lockwashers (item 5) and four nylon insert nuts (item 6).

   NOTE: The reinforcement tube (Fig. 36b item 8) is not required for the 60" and 72" brooms.

4. **Figure 36c:** If the parking stand tube only has one hole, drill the existing hole to a 21/32" diameter and drill the second Ø21/32" hole at 5 1/2" from the center and 1" from the edge of the tube as illustrated.

5. **Figure 36e:** Install each dethatching wheel (item 1) in the support tubes (item 2) and lock in place with the square wire lock pins (item 3).

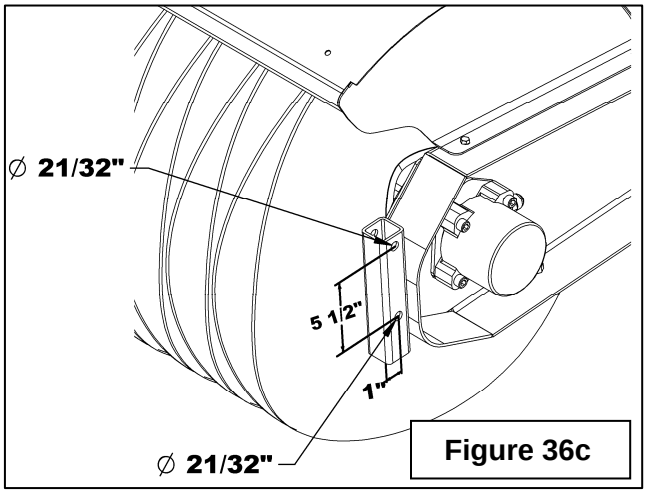

Figure 36c

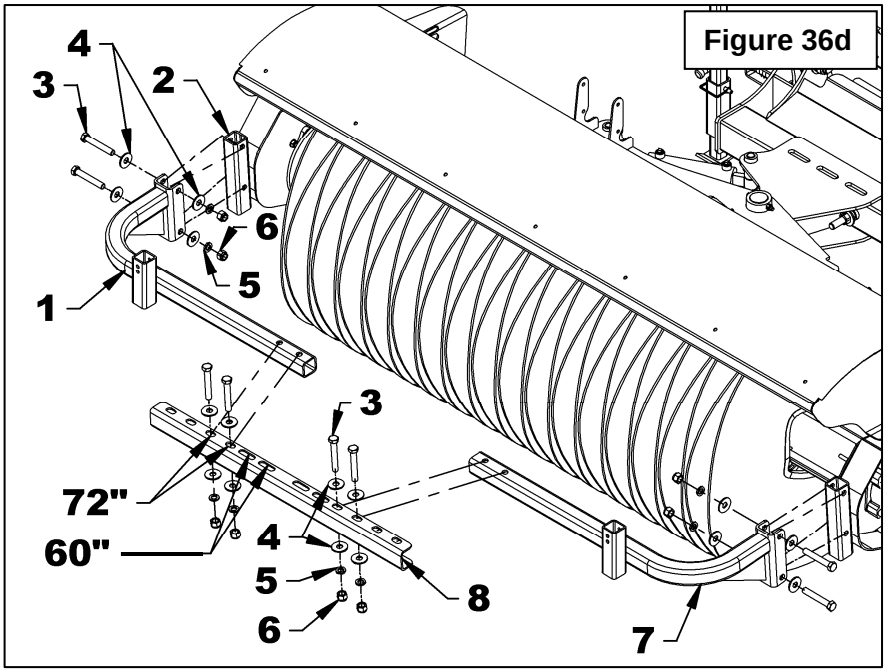

Figure 36d

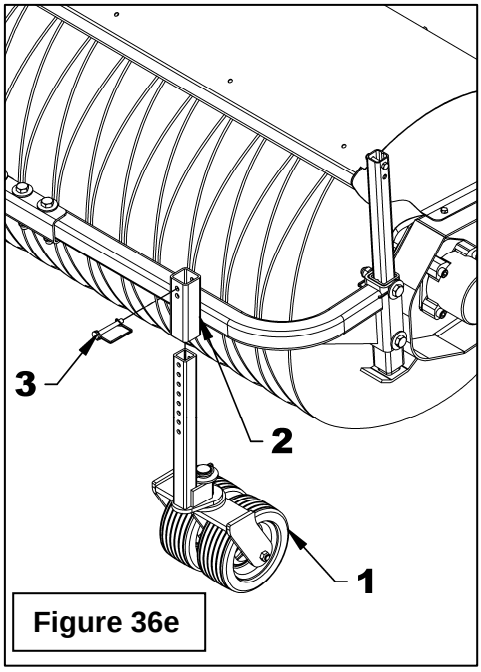

Figure 36e

Installation Lawn Dethatching Wheel Kit– 5RDF0033

(Figures 37a-37b)

INSTALLATION

1. Set the rotary broom on its four parking stands.
2. Raise the rear of the broom. Remove the 2 parking stands on each side of the middle hitch by removing the 3/8"NC x 2" hex. bolts, 3/8" NC nylon insert nuts and the 3/8" x 2 1/2" square wire lock pin.
3. Insert the dethatching wheels in the tubes where the parking stands were installed.
4. Follow the Instructions in the Operator's Manual of the broom on how to adjust the ground pressure but the width of the cleaned strip must only be 3", instead of 5 1/2" to 6 1/2".

OPERATION

1. Bristles should barely touch the ground for lawn dethatching and leaf raking operations.
2. To adjust the height of the wheel slide the inner tube upward or downward, as needed, and insert the square wire lock pin in the open hole.
3. Slower brush speed and ground speed are more adequate for lawn dethatching. This will avoid bouncing which could damage the lawn due to excessive ground contact.

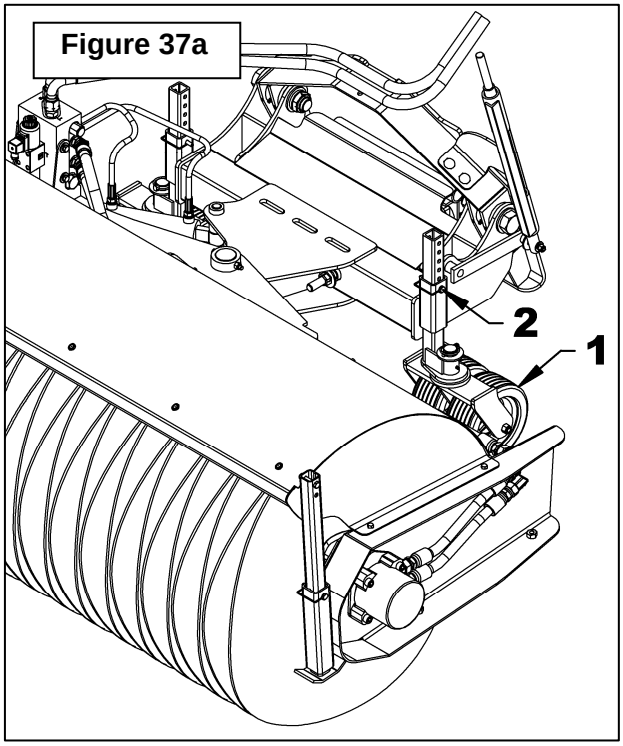

Figure 37a

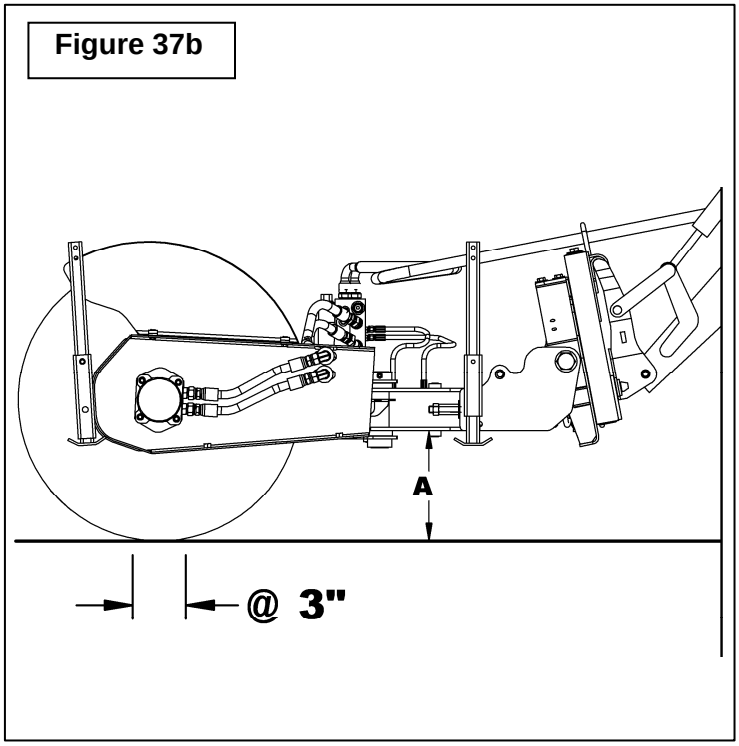

Figure 37b

Installation of the Cooling Unit 5RDF0036 ***(Figures 38a to 38g)***

For Broom working in warm region, use the 5RDF0036 oil cooler. If you own a HP2120 power unit, use the 5RDF0037 cooling unit upgrade.

IMPORTANT: To not damage the oil cooler, it is essential to disconnect the fan of the oil cooler when the temperature is under 0°C.

NOTE: The new HP2025 and HP2134 pumps are equipped with a safety system to prevent the hydraulic oil from overheating. When the hydraulic block is not power supplied, the oil is in recirculation mode meaning that the equipment will not function. To power the block, refer to the Hydraulic Pump Manual.

1. **Figure 38a:** Unscrew the 1 1/16" JIC elbow (item 1) from the in-tank filter. Remove the 3/4"NC x 2" lg bolt (item 2) and the stover nut (item 3). Remove the stover nut (item 4) from the 3/4" NC x 4 1/2" lg bolt but do not remove the bolt.
2. **Figure 38b:** Unscrew the straight 1-1/16"JIC adapter (item 1) and rotate the hose of 90° up to bring up the 90° 1-1/16"JIC elbow adapter (item 2). Tighten the straight 1-1/16"JIC adapter, to rotate the hose, at 65-75 ft-lb (93-101 N-M).
3. **Figure 38c:** Install the oil cooler support (item 1) with a 3/4" NC x 2" lg bolt (item 2) and the 3/4" stover nut (item 3) removed previously. Reinstall the 3/4" NC stover nut (item 4) previously removed on the 3/4" NC x 4 1/2" lg bolt.
4. **Figure 38d:** Install the support plates (item 1) with six 5/16" NC x 1" bolts (item 2), eight 5/16" flat washers (item 3) and six 5/16" NC nylon insert nuts (item 4) making sure to place a flat washer between the support plates and the "U" section of the frame.

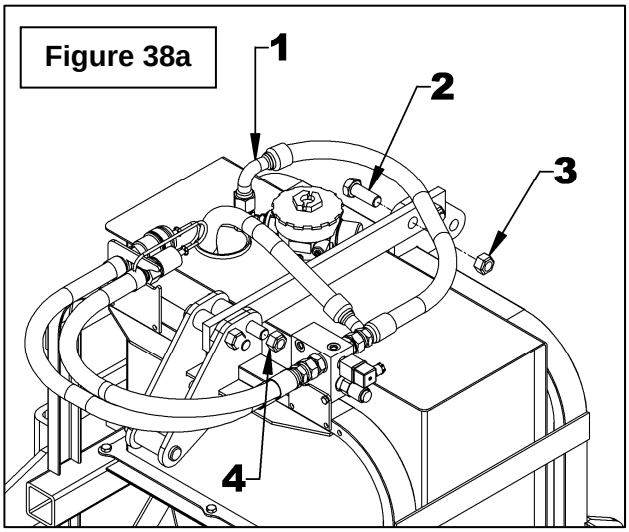

Figure 38a

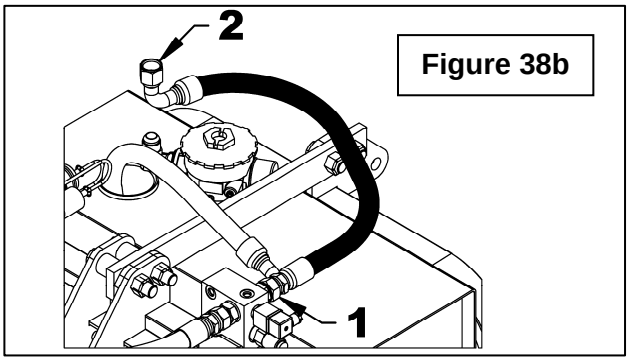

Figure 38b

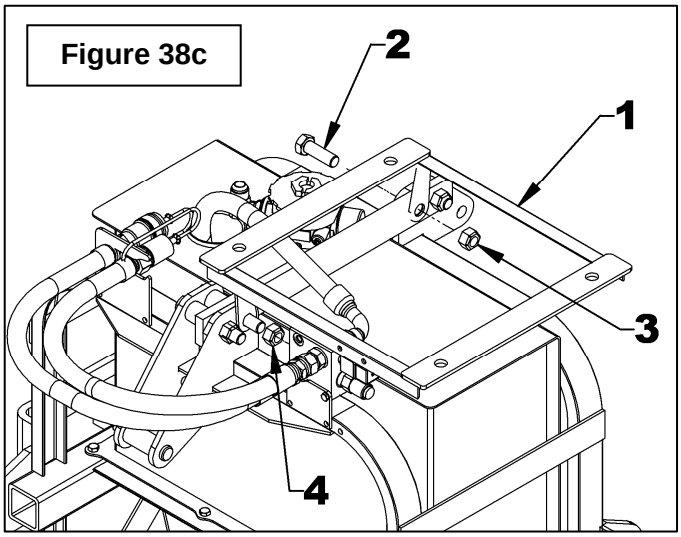

Figure 38c

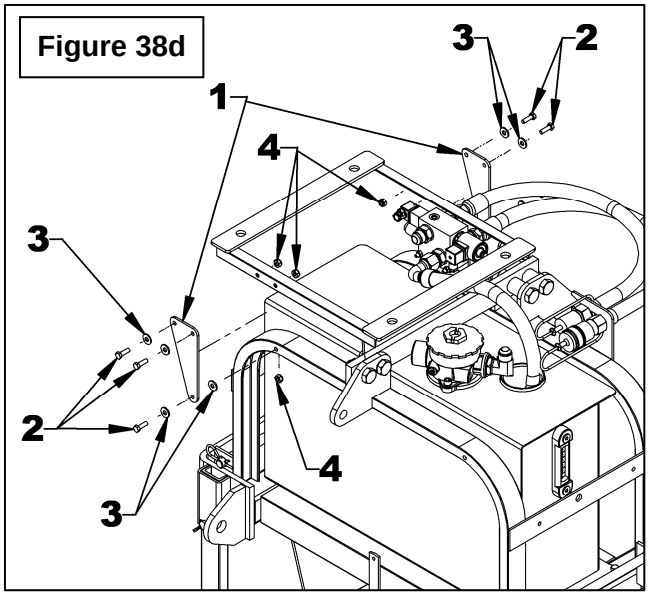

Figure 38d

4. **Figure 38e:** Install the rubber bushings (items 1-2) on the support then attach the oil cooler (item 3) with four 5/16" NC x 2 1/4" bolts (item 4), 5/16" flat washers (item 5), the flat washers supplied with the rubber bushings (item 6) and 5/16" NC nylon insert nuts (item 7).

   IMPORTANT: Position the oil cooler so the by-pass valve (item 8) faces the rear as illustrated.

6. **Figure 38f:** Install the 1 5/8" ORB – 1 1/16" JIC elbows (item 1) on the oil cooler's inlet and outlet in the positions illustrated. Connect the straight end of the outlet hose (item 2) to the oil cooler elbow and the bent end to the filter. Connect the inlet hose (item 3) previously disconnected from the filter to the other elbow making sure it passes outside the support plate (item 4).

7. **Figure 38g:** Connect the oil cooler fan harness (item 1) to the available connector on the hydraulic pump's wiring harness (item 2).

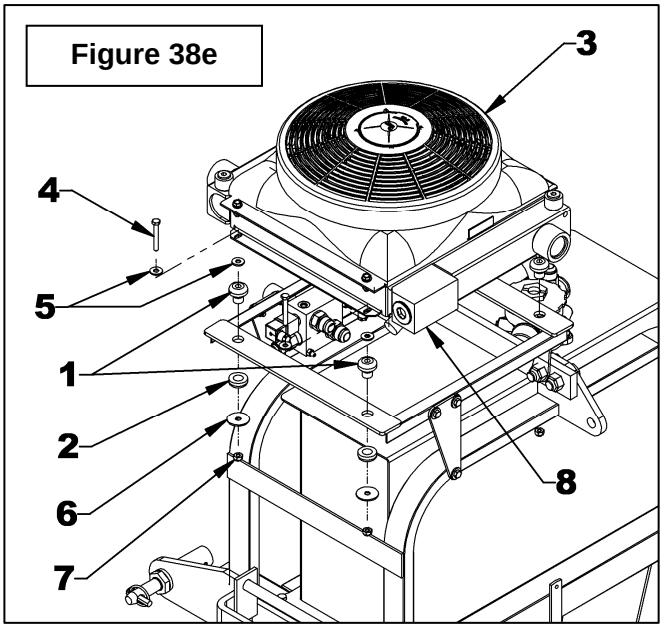

Figure 38e

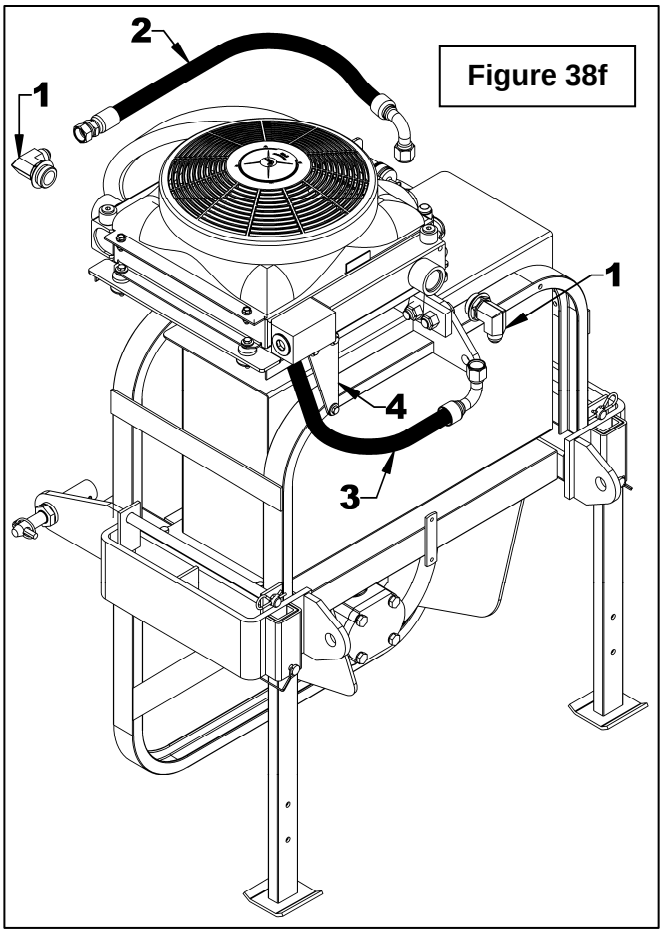

Figure 38f

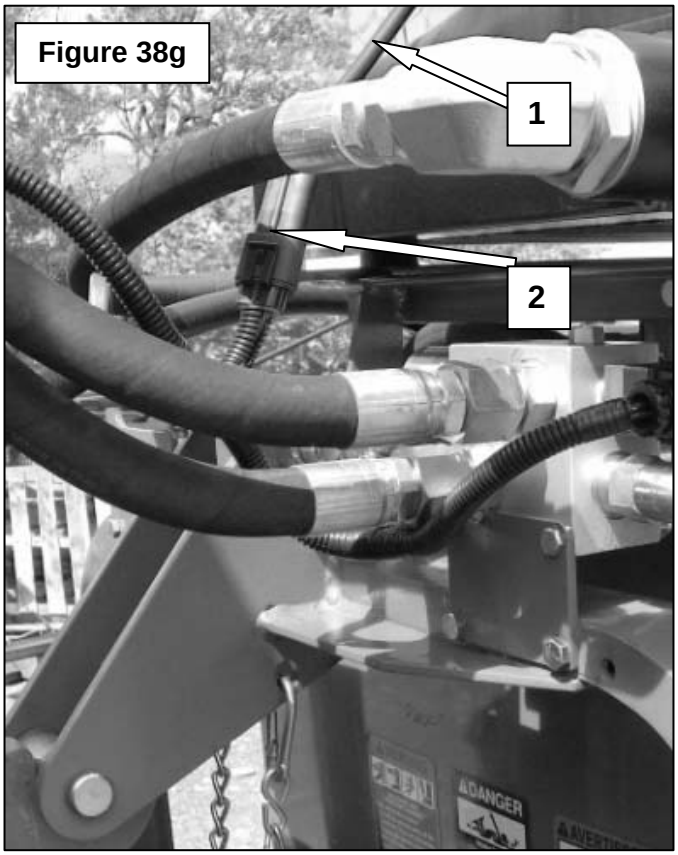

Figure 38g

Remove the Broom from the Front Loader (figures 39 to 42)

1. **Figure 42:** Lower the broom's four parking stands completely (item 2).
2. **Figure 39:** Disconnect the harness rotary broom side (item 1) from the harness tractor side (item 2).
3. **Figure 40:** Disconnect the male coupler (item 1) of the rotary broom hose from the female coupler (item 2) of the hydraulic pump hose. Disconnect the female coupler (item 3) of the rotary broom hose from the male coupler (item 4) of the hydraulic pump hose. Install the dust caps (item 5) on each coupler (items 1-2-3-4).
4. **Figure 41:** Remove the hydraulic hoses (items 1-2) and the electrical harness (item 3) from the front support of the loader (item 4). Roll up the hoses around the broom so they don't drag on the ground.
5. **Figure 42:** Remove the linchpins (item 4) from the front loader brackets (item 5).
6. **Figure 42:** Start the vehicle and tilt the front loader brackets (item 5) at an approximate angle of 45°.
7. **Figure 42:** Tilt the front loader brackets (item 5) toward the front until the broom is free.
8. Back the vehicle up until the top of the front loader brackets (item 5) is no longer under the hooks of the broom universal hitch.

   NOTE: Pay attention to any unusual problem or noise. If that's the case, stop and check that everything is in place and start again.
9. Stop the vehicle completely and engage the parking brake before leaving the vehicle.

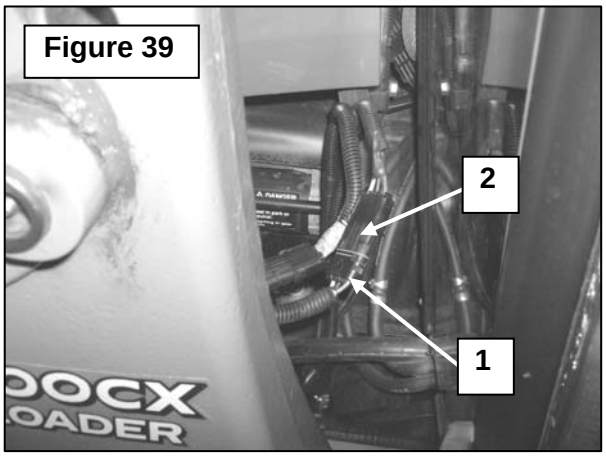

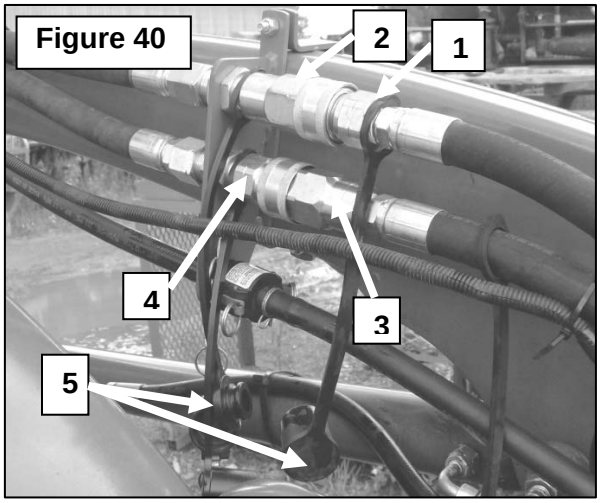

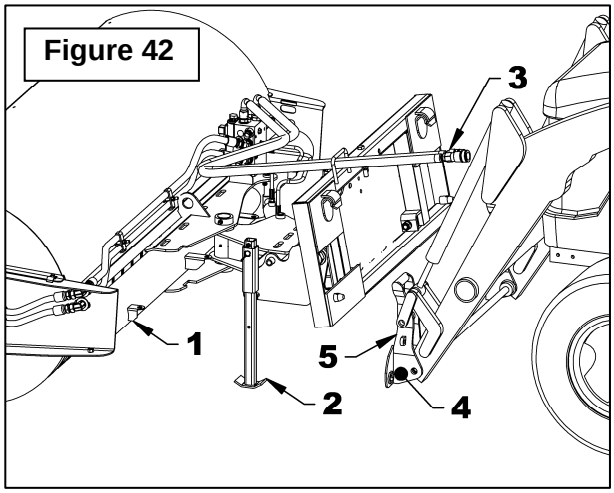

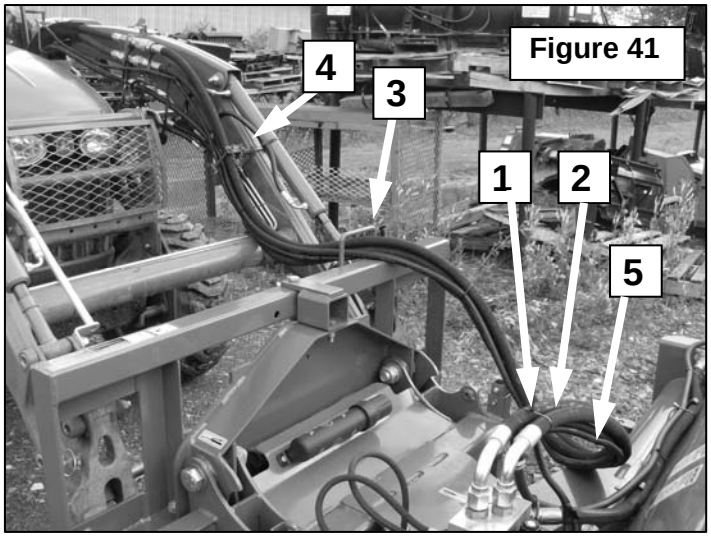

OPERATION

OPTIMUM PERFORMANCES

IMPORTANT: The hydraulic motors of the rotary broom must have a breaking in period. If it is not respected, the warranty could be voided. The breaking in period must follow these steps:

1- **15-30 minutes of operation without any load and at half speed (tractor RPM around 1250).**

2- **Check for unusual noises coming from the motors. If everything sounds normal, the load and engine speed can be increased.**

The new HP2025 and HP2134 pumps are equipped with a safety system to prevent the hydraulic oil from overheating. When the hydraulic block is not power supplied, the oil is in recirculation mode meaning that the equipment will not function. To power the block, the ignition key must be in the "ON" or "START" position. If the system remains in the recirculation mode, refer to the "Troubleshooting" section at page 43.

GENERAL PREPARATION

1. Check that hoses are connected correctly.
2. Make sure that the broom operates freely.
3. Secure the parking stands in the position where they do not touch the ground (up).

WARNING: To avoid serious injuries or death:

- **Do not allow bystanders near working area.**
- **Do not allow anyone to ride on rotary broom.**
- **Before cleaning, adjusting or repairing the rotary broom: bring the tractor to a complete stop, wait for all movement to stop, apply parking brake, lower the implement to the ground, shut off the engine and remove the ignition key.**
- **Never put any part of your body under the rotary broom while making adjustments.**

WARNING: To avoid serious injuries:

- **Always operate the broom from the operator's seat only. Never allow anyone to ride on the machine.**
- **Operate the broom at a speed that matches the working conditions. Be extremely careful when working on banks or uneven terrain.**
- **Always wear protective eyewear when operating the broom.**

OPERATING CONTROLS

1. Use the PTO button to start and stop the brush. Start the engine and put the throttle lever at low engine speed. Engage the PTO lever and maintain engaged. Make sure the broom is turning in the right direction. If not, switch the quick couplers. To stop the rotation, disengage the PTO button.
2. Never engage or disengage the rotary broom at high engine speed or the hydraulic motor(s) could get damaged.
3. Raise and lower the broom using the hydraulic lift lever located on the tractor. Pulling the lever backward raises the broom, pushing the lever forward lowers the broom.
4. Control brush speed with the RPM. Under most conditions, if the brush speed is too fast, it results in debris coming over the hood onto the operator.

Hydraulic Angling Adjustment

To actuate the hydraulic cylinder that adjusts the broom angle, the brush must be touching the grounds and in operation.

Use the switch to turn the broom left or right to a maximum angle of 23°. If the broom does not move in the desired direction, reverse the white and blue wires under the switch.

When the broom is provided with lawn dethatching wheels, it may be necessary to raise the broom to allow angling movement.

Ground Pressure Adjustment

(Figures 43-44)

1. Adjust the ground pressure when the broom is attached to a front loader.

2. Tilting the plate backward increases the ground pressure. Tilting the plate pushes the base toward the springs thus increasing their tension.

3. The broom middle hitch must always be parallel to the ground (measure A).

4. For the most efficient sweeping, the brush must have good ground contact without too much pressure being placed on the bristles in order to prevent them from bending which would result in premature wear of the brush.

5. Make sure the vehicle's tire pressure is well adjusted.

6. Find a hard and dirty surface. Lower the brush to the ground, engage the broom and let the brush turn for 15 seconds while remaining in place. Disengage the broom without raising it and wait for the brush to stop turning.

7. Back up the vehicle without raising the broom or you will lose the reference point for the ground pressure adjustment. Once completely stopped, turn off the engine.

8. Measure the cleaned strip. If the adjustment is correct, the strip should measure between 5 1/2" and 6 1/2" (140 and 165mm) wide and the two ends of the strip should be parallel. Repeat the procedure until the recommended width is obtained.

Figure 43

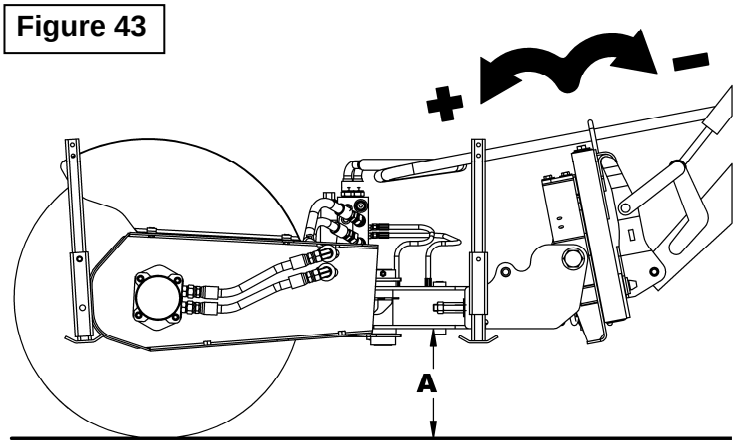

Figure 44

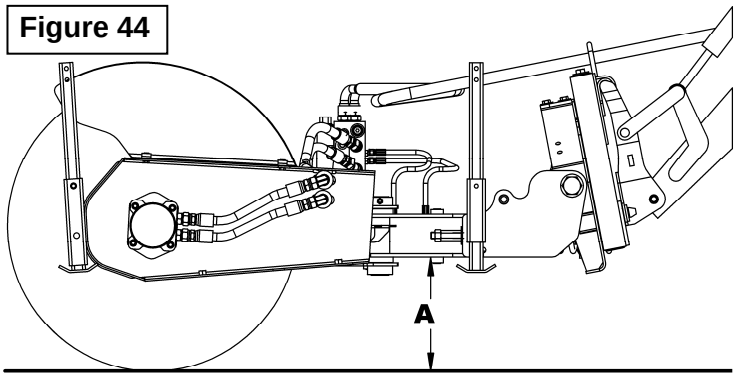

The rotary broom's suspension design keeps the ground pressure of the brush constant and within a pressure range that makes the brush sweep with the tips of the bristles for a longer brush life.

Improper downward pressure can decrease brush life up to 95%. The broom must sweep with the bristle tips. When too much down pressure is applied, the broom no longer uses the tips; the broom cleans with the sides of the bristles. This limits the flicking action of the bristles and limits its sweeping effectiveness.

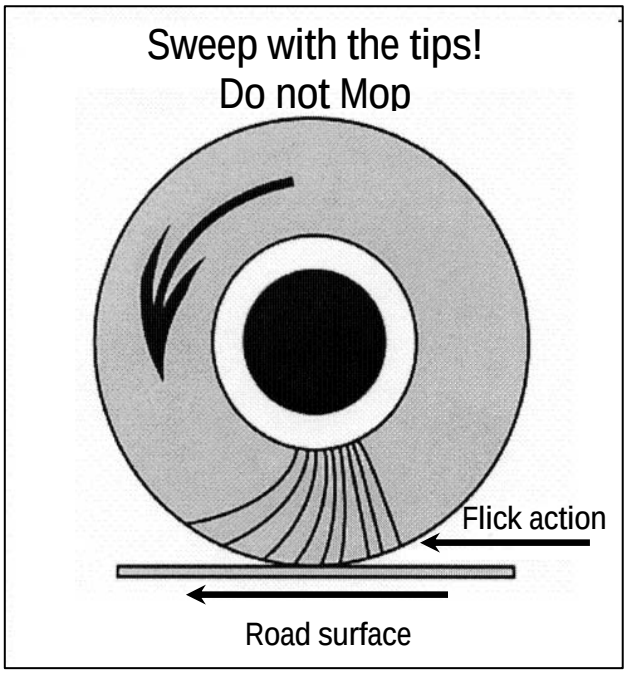

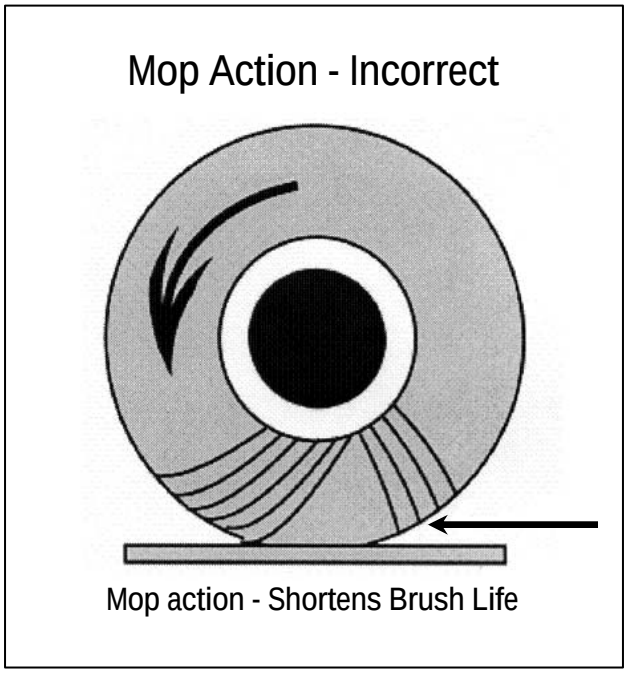

General Sweeping

1. Minimize dust by reducing brush speed and by sweeping on days with high moisture.
2. For light material, angle broom half way to the right or to the left rather than fully angled to obtain a wider sweeping path.
3. For heavier material, reduce ground speed and angle the brush fully to the left or right to expel the accumulated debris from the sweeping path as quickly as possible thus preventing build up.
4. Prevent damage to the broom by removing large foreign objects.

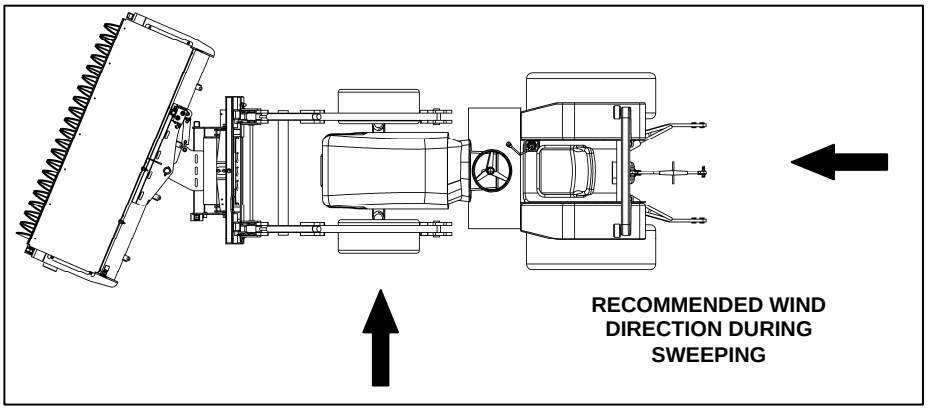

Lawn Dethatching & Leaf Raking

IMPORTANT: Optional lawn dethatching wheels must be installed to perform these tasks in order to avoid excessive ground contact.

1. Bristles should barely touch the ground for lawn dethatching and leaf raking operations.
2. To adjust the height of the wheel slide the inner tube upward or downward, as needed, and insert the square wire lock pin in the open hole.
3. We recommend adjusting the wheel height to 1" lower than the brush height to make a first try on the grass. Then raise or lower the wheels as required.
4. Slower brush speed and ground speed are more adequate for lawn dethatching. This will avoid bouncing which could damage the lawn due to excessive ground contact.

Snow Removal

WARNING:

To avoid serious injuries: Foreign objects in snow may be thrown farther than the snow. Use the slowest brush speed that will perform the job. Stay aware of broom discharge direction.

1. This broom's optimum performance is achieved when snow depth is 5" (127 mm) or less.
2. To avoid the snow from being blown back on the tractor and operator, sweep with the wind blowing in the direction of broom discharge.

WARNING:

To avoid serious injuries: Snow or ice build-up on the sweeper hood can cause a loss of tractor steering control. Regularly remove any snow or ice from the sweeper hood to prevent the excess weight from affecting steering.

3. Vary the brush speed and broom angle so the brush throws material on each side to prevent excessive accumulations.
4. Brush speed must be at its maximum to obtain a better performance in wet, heavy snow or slush.

MAINTENANCE

ALWAYS USE GENUINE PARTS WHEN REPLACEMENT PARTS ARE REQUIRED.

1. Avoid exposing broom bristles to direct sunlight for long periods to avoid damage.
2. Because of the dust raised during sweeping, the tractor air cleaner should be checked daily and replaced when necessary.

WARNING: Provide adequate blocking before working under the rotary broom when in raised position.

Hydraulic Oil

Check oil level before each use. Refer to the operation's manual of the HP2120, HP2025 and HP2134 hydraulic pumps for the kind and quantity of oil.

IMPORTANT: If you own a HP2120 hydraulic pump, it is recommended to use the 5RDF0037 update kit.

WARNING: Escaping hydraulic/diesel fluid under pressure can penetrate the skin causing severe injuries.

- **Do not use your hands to check for leaks. Use a piece of cardboard or paper to search for leaks.**

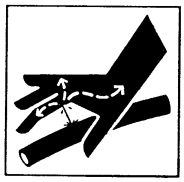

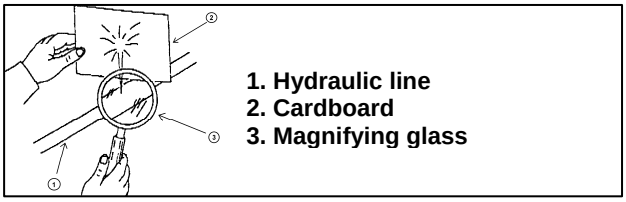

- **Shut engine off and relieve pressure before connecting or disconnecting lines.**
- **Tighten all connections before starting engine or pressurizing lines.**
- **If any fluid is injected into the skin, obtain medical attention immediately or gangrene may result.**

Storage

Before storing the rotary broom, certain precautions should be taken to protect it from deterioration.

1. Clean the rotary broom thoroughly.
2. Make all the necessary repairs.
3. Repaint all parts from which paint has worn or peeled.
4. Lubricate the rotary broom as instructed under *Lubrication*.
5. Replace all decals that are damaged, lost, or otherwise become illegible. If a part to be replaced has a sign on it, obtain a new decal from your dealer and install it in the same place as on the removed part.
6. When the rotary broom is dry, oil all moving parts. Apply oil liberally to all surfaces to protect against rust.

IMPORTANT: Do not allow oil or grease on broom bristles.

7. Store broom on parking stands so that the bristles do not touch the ground.
8. Store in a dry place.

IMPORTANT: If broom bristles are exposed to direct sunlight, protect bristles with a tarp.

Brush Replacement
(Figure 45)

When the wafers reach a diameter of 18", it is necessary to replace them in order to maximize the performance of your broom.

NOTE: The broom does not need to be attached to the vehicle to replace the brush.

1. Set the rotary broom on the four parking stands (item 13).
2. Remove the four 1/2"NC x 2 1/2" allen socket head cap screws (item 1) and the four 1/2"NC nylon insert nuts (item 2) holding the hydraulic motor (item 3).
3. Remove the two 1/2"NC x 1 1/2" hex bolts (item 5) and the two 1/2"NC nylon insert nuts (item 6) holding the bearing.
4. Remove the brush support and the bearing from the broom housing (item 8).
5. Remove the four 3/8"NC x 2 1/2" hex. bolts (item 9), the four lockwashers (item 10) and the retaining plate (item 11).
6. Remove the brushes (item 12) from the brush support (item 8).
7. Clean the brush support (item 8) and do a visual inspection for any signs of damage or cracks and repair if needed before installing the new brushes.

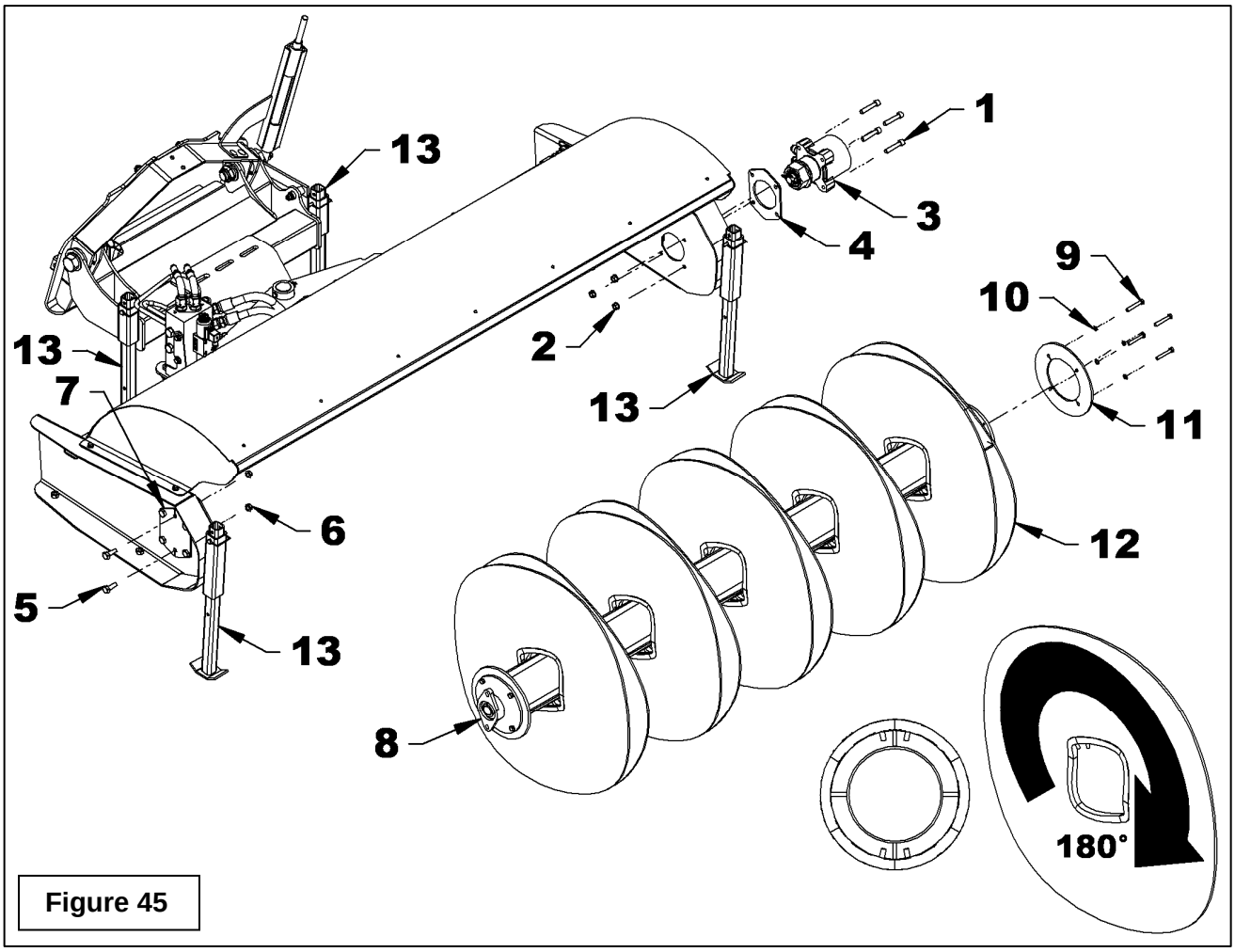

Figure 45

8. For brooms with only one motor, check for any sign of wear on the drive plate at the end of the brush support. Make sure the six nuts holding the drive plate(s) are tightened at 55 lb/ft.
9. Install the new brushes (item 12) on the brush support (item 8) by aligning the guides on each side of one of the brush support tubes and rotating each brush 180° (see figure 45).
10. Shake the brushes (item 12) before installing the retaining plate (item 11) to compress them.
11. Reinstall the retaining plate (item 11) and secure in place with the four 3/8" NC x 2 1/2" hex. bolts and the four lockwashers (items 9-10), without applying too much pressure between brushes. Place the last brush in the same direction than the next to last.
12. Place the brush support (item 8) under the broom cover.
13. Lift the brush support (item 8) with a jack. Insert the bearing in it's opening placing the grease fitting toward the outside and attach to the support plate (item 7) with the two 1/2" NC x 1 1/2" hex. bolts (item 5) and the two 1/2" NC serrated flange nuts (item 6). The holes must align perfectly or the broom might bounce.
14. Move the jack at the end where the hydraulic motor (item 3) is installed. Raise the brush support (item 8) to align it with the opening in the housing. Insert the hydraulic motor hub (item 3) in the brush support. It might be necessary to turn the brush support to align the hub faces with the drive plate bolted to the brush support.
15. Attach the hydraulic motor (item 3) and its spacer (item 4) to the broom housing with the four 1/2" NC x 2 1/2" allen socket head cap screw (item 1) and the four 1/2"NC serrated flange nuts (item 2).

Compression Springs

(Figure 46)

The compression springs must always be adjusted at the same length in order to provide high quality sweeping. **NEVER CHANGE THE CONFIGURATION OF THE SPRINGS.**

Check that the springs are correctly compressed by measuring from the rear of the middle hitch to the top of the spring support as illustrated. If the distance is not 11" (280 mm) adjust the springs with the tension bolts.

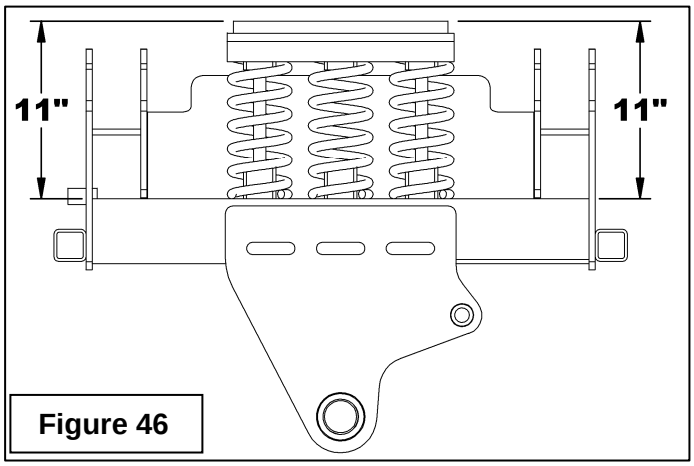

Figure 46

LUBRICATION

Use a grease gun, grease and lubricate as follows:

DESCRIPTION	TIME INTERVAL	LUBRICATION REQUIRED
All Pivot Points	40 hours	Use a good quality multipurpose lubricant
Bearing	40 hours	Grease the bearing
Hydraulic Pump (refer to the HP2120, HP2025 and HP2134 Operator's Manual)	After each use	Check the oil level of the oil tank
	400 hours or once a year	Change the oil

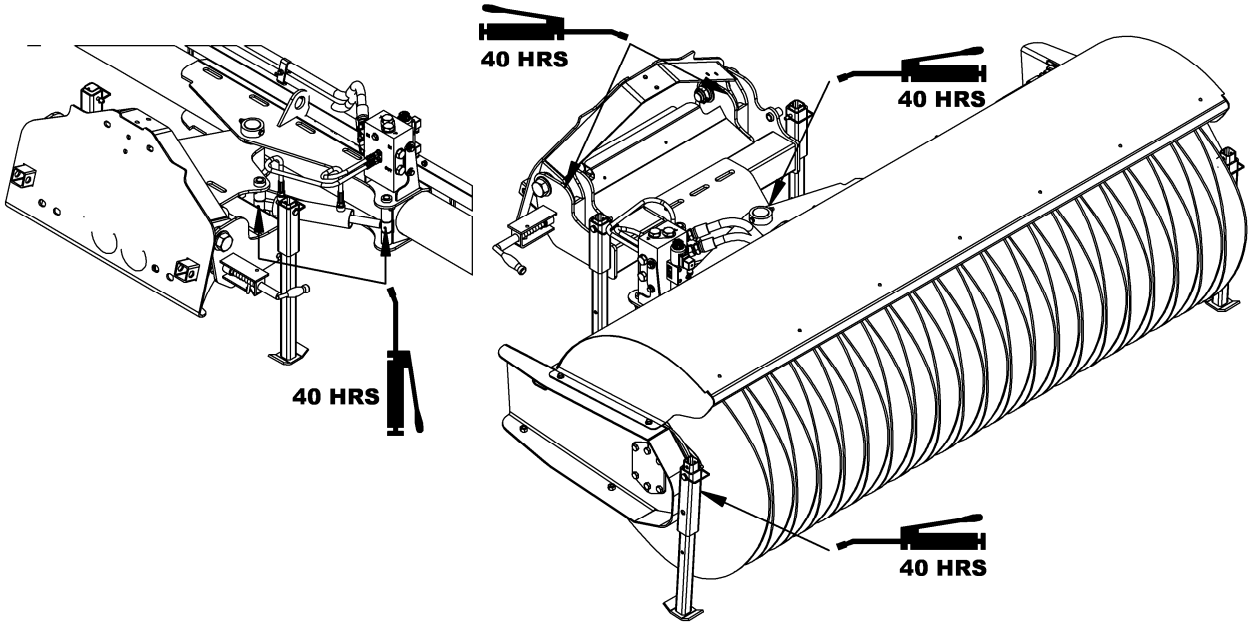

PERIODIC CHECKS

DESCRIPTION	TIME INTERVAL	REQUIRED CHECKS
Hoses	Each lubrication	Check for leaks
Hydraulic motor	Each lubrication	Check for leaks
Hydraulic block	Each lubrication	Check for leaks
Brushes	100 hours of use	Check for wear and replace if needed
Housing, hitches, brush support	100 hours of use	Repair if needed
Hardware	24 hours of use	Check and tighten if needed

TROUBLESHOOTING

Uneven Wear of the Brush

- Make sure there is no debris wrapped around the brush.
- Check the ground pressure adjustment (see section "Ground Pressure Adjustment").
- Remove the accumulated debris under the hood.

Debris Accumulation in Front

- Reduce the travel speed.
- Increase the engine rpm.
- Make more than one pass.
- Raise the brush to decrease the contact area.
- Increase the broom angle.

The Brush Bounces

- The operator transmits a vibration to the accelerator (HST pedal). Solution: Use the cruise control.
- The quantity of debris being swept is too large. Solution: Reduce the width of the sweeping path and place the broom at an angle to prevent an accumulation of debris.

Note: The travel speed of the tractor and the down pressure of the brush will have little effect on this condition.

Rear Debris Being Thrown Back

The quantity of debris being swept is too large. Solution: Reduce the width of the sweeping path and place the broom at an angle to prevent an accumulation of debris.

Note: The travel speed of the tractor and the down pressure of the brush will have little effect on this condition. It is therefore recommended keeping the same sweeping settings and to make a second pass to complete the job.

Debris Left on the Ground

- The travel speed of the tractor is too fast. Slow down.
- The ground pressure of the brush is too low. Solution: Increase pressure with the engagement levers located on the top of the broom.

Note: The higher the ground pressure of the brush is, the more the brush life is reduced.

TROUBLESHOOTING

Optimum Performance

IMPORTANT: The optimum performances of the rotary broom are only achieved after 10 to 15 minutes of rotary broom operation. It is therefore important to ensure that the hydraulic oil reaches a temperature of over 40ºC (104ºF) before judging the rotary broom 's performances.

The following chart serves as a guide in case of a malfunction. If the problem is not solved after taking the appropriate corrective measure, contact your dealer.

WARNING: Several corrective measures present a certain risk, which may cause serious injuries or death.

Only a qualified person, familiar with the risks associated with hydraulics, electricity and machinery should perform the repairs. Review the safety precautions at the beginning of this manual.

WARNING: Hot engine parts and hydraulic oil can cause serious burns. Always let the engine cool before proceeding with repairs or maintenance.

CAUTION: The oil temperature must never go above 65ºC (149ºF) to avoid damages to the hydraulic components.

PROBLEM	CORRECTIVE MEASURE
1. The brush does not turn	• Check if an object is blocking the fan or auger • Check that the PTO is engaged • Check for oil leaks • Check if the pump is in recirculation mode • Check hydraulic pump oil level and add some if needed • Check that the input and output hoses are connected • Check that the input and output hoses are in the right position, if not reverse their position
2. The brush is turning in reverse	• Check that the hoses are connected correctly to the hydraulic manifold and reverse their position if necessary
3. The brush stops	• Check the viscosity of the hydraulic oil • Check hydraulic pump oil level and add some if needed • Check if the tractor engine is at full RPM • Check the hydraulic pressure of the system • Check the hydraulic flow of the system

PROBLEM	CORRECTIVE MEASURE
4. The Broom does not clean the debris properly	• Check the viscosity of the hydraulic oil • Check hydraulic pump oil level and add some if needed • Check if the tractor engine is at full RPM • Check hydraulic pump hydraulic pressure • Check hydraulic pump hydraulic flow
5. The debris are not thrown very far	• The engine is not at full RPM • Check hydraulic pump oil level and add some if needed • Check hydraulic pump hydraulic pressure, adjust if too low • Check hydraulic pump hydraulic flow • Reduce the ground speed (Refer to Operation section) • Check the hoses for leaks, replace if needed • Check the motor relief valve
6. The broom angling does not operate	• Check if the rotary broom is engaged • Check if the attachment flow restrictor is obstructed, replace if needed • Check if the fuse of the 58" wiring harness or the tractor one is burnt • Check if the hoses and wires are connected properly
7. The hydraulic motor of the rotary broom leaks oil from the shaft	• Check that the maximum hydraulic pressure is below the allowable level • Check that the maximum return pressure is below the allowable level • Check that the hydraulic motors relief valve is operating properly • Replace the motor seals • Replace the motor

HYDRAULIC DIAGRAM

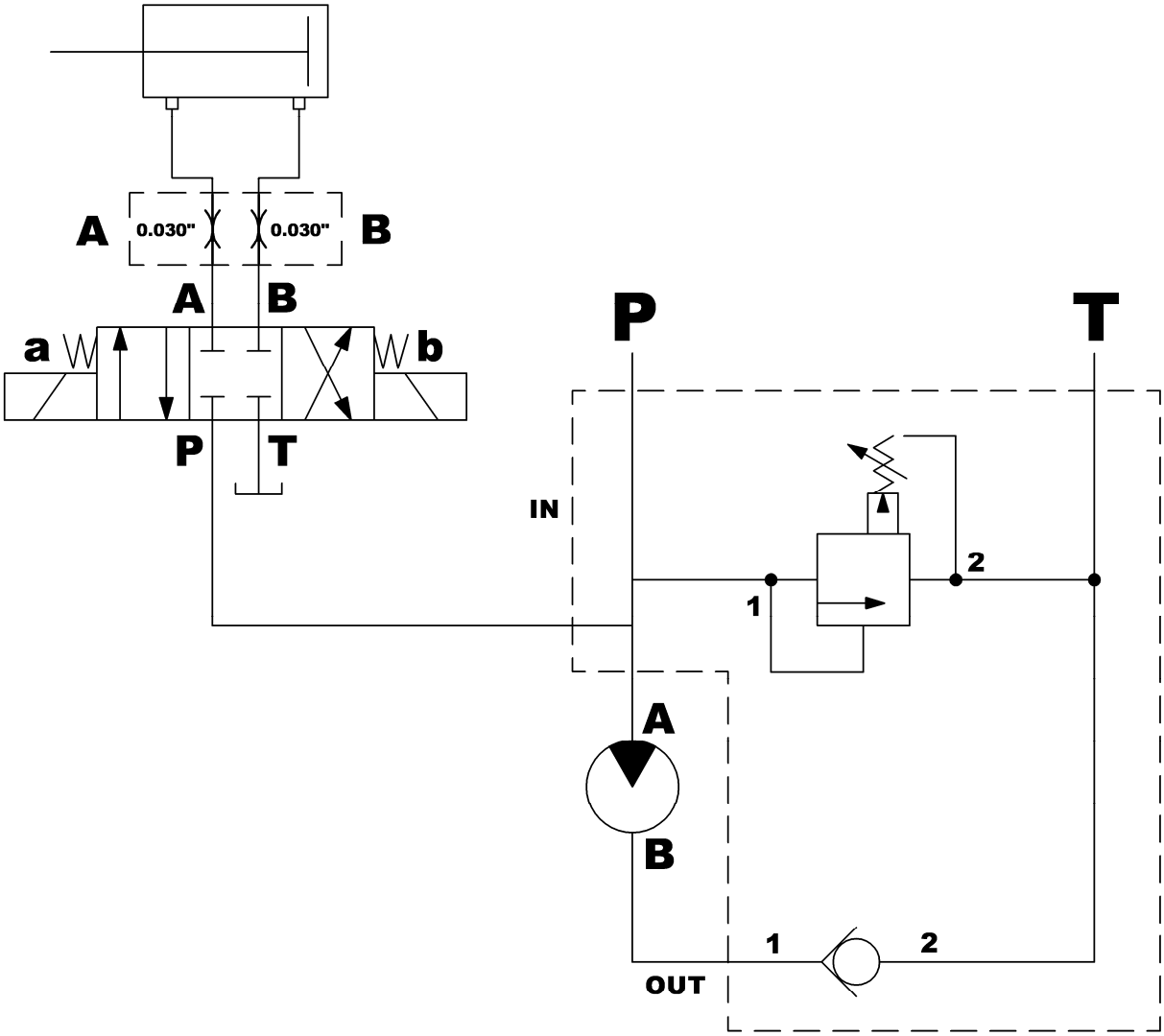

ELECTRIC DIAGRAM

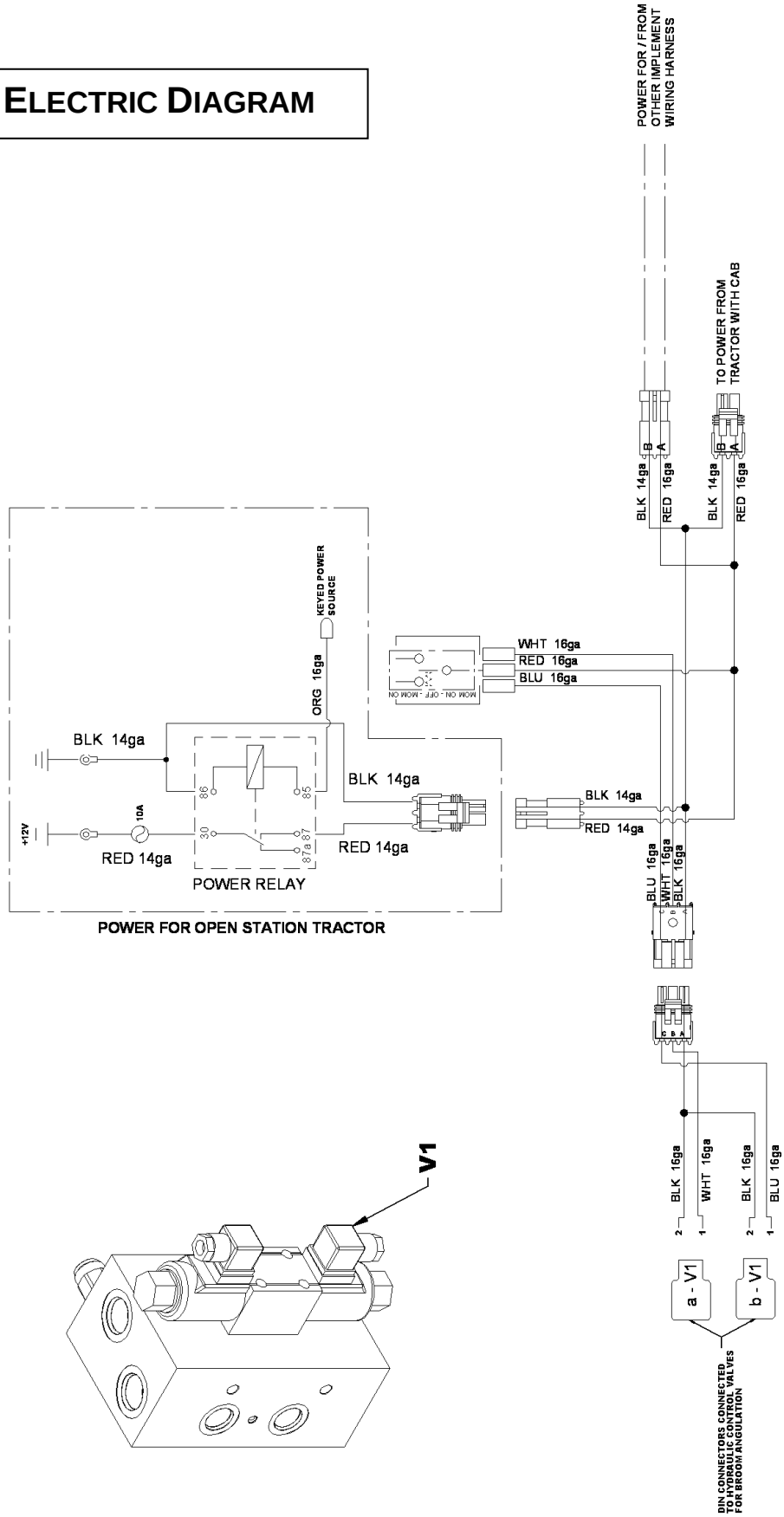

TORQUE SPECIFICATION TABLE

GENERAL SPECIFICATION TABLE

Use the following torques when special torques are not given

NOTE: These values apply to fasteners as received from supplier, dry, or when lubricated with normal engine oil. They do not apply if special graphited or moly sidulphide greases or other extreme pressure lubricants are used. This applies to both UNF and UNC threads.

BOLT HEAD IDENTIFICATION MARKS AS PER GRADE NOTE: MANUFACTURING MARKS WILL VARY.													
		Torque				Torque				Torque			
BOLT SIZES		Pounds-Foot		Newtons-Meter		Pounds-Foot		Newtons-Meter		Pounds-Foot		Newtons-Meter	
Inches	Millimeters	MIN.	MAX.	MIN.	MAX.	MIN.	MAX.	MIN.	MAX.	MIN.	MAX.	MIN.	MAX.
1/4	6.35	5	6	6.8	8.13	9	11.0	12.2	14.9	12	15	16.3	30.3
5/16	7.94	10	12	13.6	16.3	17	20.5	23.1	27.8	24	29	32.5	39.3
3/8	9.53	20	23	27.1	31.2	35	42.0	47.5	57.0	45	54	61.0	73.2
7/16	11.11	25	30	40.7	47.4	54	64.0	73.2	86.8	70	84	94.9	113.9
1/2	12.70	45	52	61.0	70.5	80	96.0	108.5	130.2	110	132	149.2	179.0
9/16	14.29	65	75	88.1	101.6	110	132.0	149.2	179.0	160	192	217.0	260.4
5/8	15.88	95	105	128.7	142.3	150	180	203.4	244.1	220	264	298.3	358.0
3/4	19.05	150	185	203.3	250.7	270	324	366.1	439.3	380	456	515.3	618.3
7/8	22.23	160	200	216.8	271.0	400	480	542.4	650.9	600	720	813.6	976.3
1	25.40	250	300	338.8	406.5	580	696	786.5	943.8	900	1080	1220.4	1464.5
1 1/8	25.58	-	-	-	-	800	880	1084.8	1193.3	1280	1440	1735.7	1952.6
1 1/4	31.75	-	-	-	-	1120	1240	1518.7	1681.4	1820	2000	2467.9	2712.0
1 3/8	34.93	-	-	-	-	1460	1680	1979.8	2278.1	2380	2720	3227.3	3688.3
1 1/2	38.10	-	-	-	-	1940	2200	2630.6	2983.2	3160	3560	4285.0	4827.4

METRIC BOLT TORQUE SPECIFICATIONS

		Coarse thread					Fine Thread				
Size of screw	Grade No.	Pitch (mm)	Pounds-Foot		Newtons-Meter		Pitch (mm)	Pounds-Foot		Newtons-Meter	
			MIN.	MAX.	MIN.	MAX.		MIN.	MAX.	MIN.	MAX.
M6	4T 7T 8T	1.0	3.6 5.8 7.2	5.8 9.4 10	4.9 7.9 9.8	7.9 12.7 13.6	-	- - -	- - -	- - -	- - -
M8	4T 7T 8T	1.25	7.2 17 20	14 22 26	9.8 23 27.1	19.0 29.8 35.2	1.0	12 19 22	17 27 31	16.3 25.7 29.8	23.0 36.6 42
M10	4T 7T 8T	1.5	20 34 38	25 40 46	27.1 46.1 51.5	33.9 54.2 62.3	1.25	20 35 40	29 47 52	27.1 47.4 54.2	39.3 63.7 70.5
M12	4T 7T 8T	1.75	28 51 57	34 59 66	37.9 69.1 77.2	46.1 79.9 89.4	1.25	31 56 62	41 68 75	42 75.9 84	55.6 92.1 101.6
M14	4T 7T 8T	2.0	49 81 96	56 93 109	66.4 109.8 130.1	75.9 126 147.7	1.5	52 90 107	64 106 124	70.5 122 145	86.7 143.6 168
M16	4T 7T 8T	2.0	67 116 129	77 130 145	90.8 157.2 174.8	104.3 176.2 196.5	1.5	69 120 140	83 138 158	93.5 162.6 189.7	112.5 187 214.1
M18	4T 7T 8T	2.0	88 150 175	100 168 194	119.2 203.3 237.1	136 227.6 262.9	1.5	100 177 202	117 199 231	136 239.8 273.7	158.5 269.6 313
M20	4T 7T 8T	2.5	108 186 213	130 205 249	146.3 252 288.6	176.2 277.8 337.4	1.5	132 206 246	150 242 289	178.9 279.1 333.3	203.3 327.9 391.6

TORQUE SPECIFICATION TABLE

TORQUE SPECIFICATION TABLE FOR HYDRAULIC FITTINGS
Use the following torques when a specific torque is not given. Note: These values apply to fittings when dry. These values do not apply if lubricants are used..

SIZE OF FITTINGS	TORQUE	
SIZE (JIC) - INCHES	foot-pounds	Newton-meters
03 - 3/8"- 24	8-9	12-13
04 - 7/16"- 20	13-15	18-20
05 - 1/2"- 20	14-15	19-21
06 - 9/16"- 18	23-24	32-33
08 - 3/4"- 16	40-43	55-57
10 - 7/8"- 14	43-48	59-64
12 - 1 1/16"- 12	68-75	93-101
14 - 1 3/16"- 12	83-90	113-122
16 - 1 5/16"- 12	112-123	152-166
20 - 1 5/8"- 12	146-161	198-218
24 - 1 7/8"- 12	154-170	209-230
32 - 2 1/2"- 12	218-240	296-325

SIZE (ORB) - INCHES	foot-pounds	Newton-meters
03 - 3/8"- 24	8-10	11-13
04 - 7/16"- 20	14-16	20-22
05 - 1/2"- 20	18-20	24-27
06 - 9/16"- 18	24-26	33-35
08 - 3/4"- 16	50-60	68-78
10 - 7/8"- 14	72-80	98-110
12 - 1 1/16"- 12	125-135	170-183
14 - 1 3/16"- 12	160-180	215-245
16 - 1 5/16"- 12	200-220	270-300
20 - 1 5/8"- 12	210-280	285-380
24 - 1 7/8"- 12	270-360	370-490

TORQUE SPECIFICATION TABLE

SIZE (NPT) - INCHES	Torque FFT
1/8"- 27	2.0 - 3.0
1/4"- 18	2.0 - 3.0
3/8"- 18	2.0 - 3.0
1/2"- 14	2.0 - 3.0
3/4"- 16	2.0 - 3.0
1"- 11 1/2"	1.5 - 2.5
1 1/4"- 11 1/2"	1.5 - 2.5
1 1/2"- 11 1/2"	1.5 - 2.5

ASSEMBLY

The method used to assemble fittings with NPT threads is in two stages. First tighten firmly by hand then tighten one again according to the number of turns listed on the above table. The following method is recommended to minimize the risks of leaks and/or damages to the parts.

1. Inspect threads and tapping to make sure they are clean.
2. Apply a sealant/lubricant product to the NPT threads (Teflon covered threads are preferable to other lubricating products). If PTFE tape (Teflon) is used, make 1,5 or 2 turns clockwise.

   Attention: More than 2 turns can cause distortion or cracks in the orifice.
3. Tighten the fitting by hand.
4. Screw the fitting the number of turns listed on the above table making sure that in the case of a shape fitting the end is aligned to the desired position. **Never unscrew a fitting to obtain the proper alignment.**
5. If the leak persists after having followed the preceding instructions, check that the threads are not damaged and the number of seated threads.

If the threads are very damaged, replace the fitting. If the tapping is damaged, retap if possible or replace the part.

Usually, the number of threads seated is between 3, 5 and 6. If the range is different it would indicate that the fitting was tightened too much or not enough or that the tightening was not within thread tolerances. If the fitting is not tight enough, tighten but never more than one turn. If it's too tight, control the threading and tapping and replace the section that has threads that are not within tolerances.

PART NO.
5RDSW2160A

All Rights Reserved